CNC TOOL HOLDERS





STU
SHOPTOOLUSA

CNC TOOL HOLDERS



External Turning Tool Holder

Internal Turning Tool Holder

Threading Tool Holder

Grooving Tool Holder

P Type Tool Holder

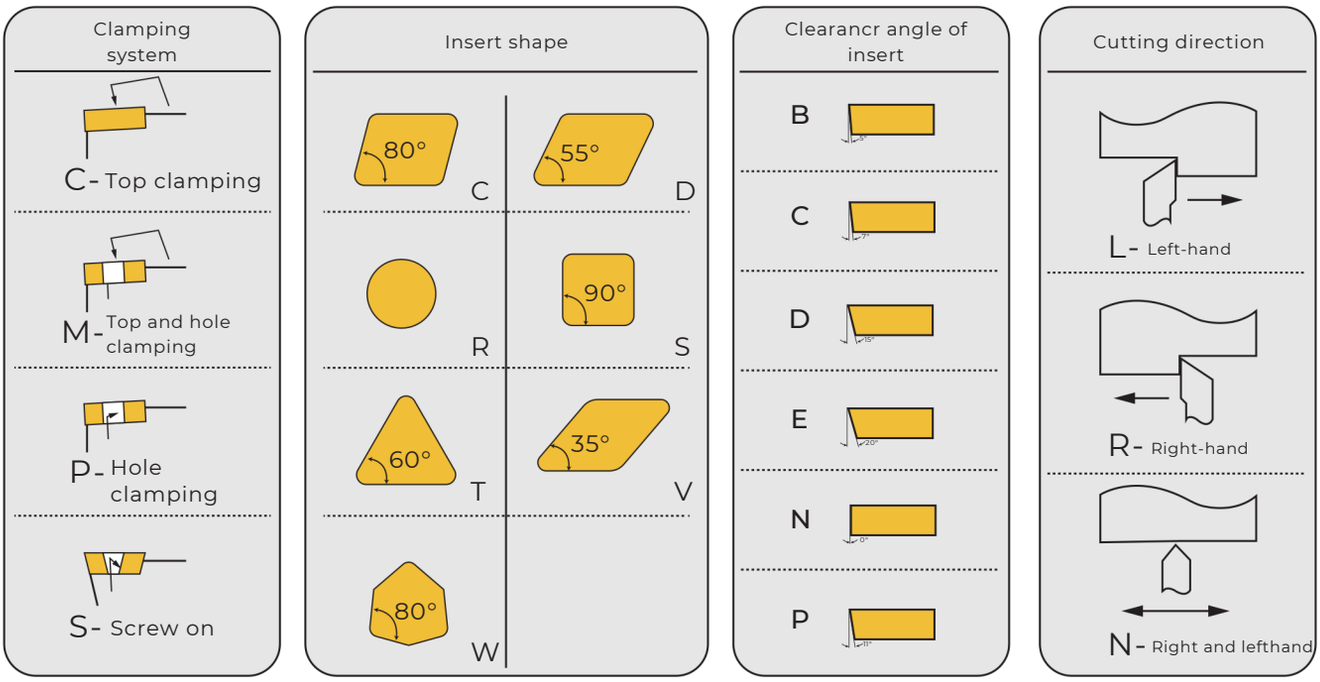
Clamping system
C- Top clamping
M- Top and hole clamping
P- Hole clamping
S- Screw on
Insert shape
80°
C
55°
D
R
90°
S
60°
T
35°
V
80°
W
Clearancr angle of insert
B
C
D
E
N
P
Cutting direction
L- Left-hand
R- Right-hand
N- Right and lefthand

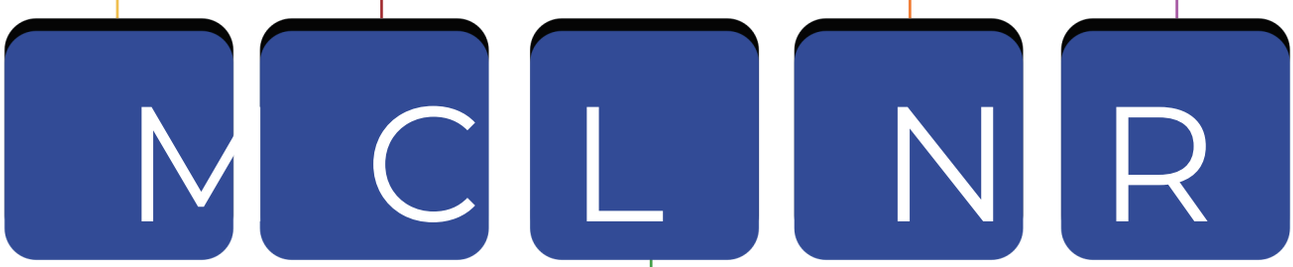
M
C
L
N
R

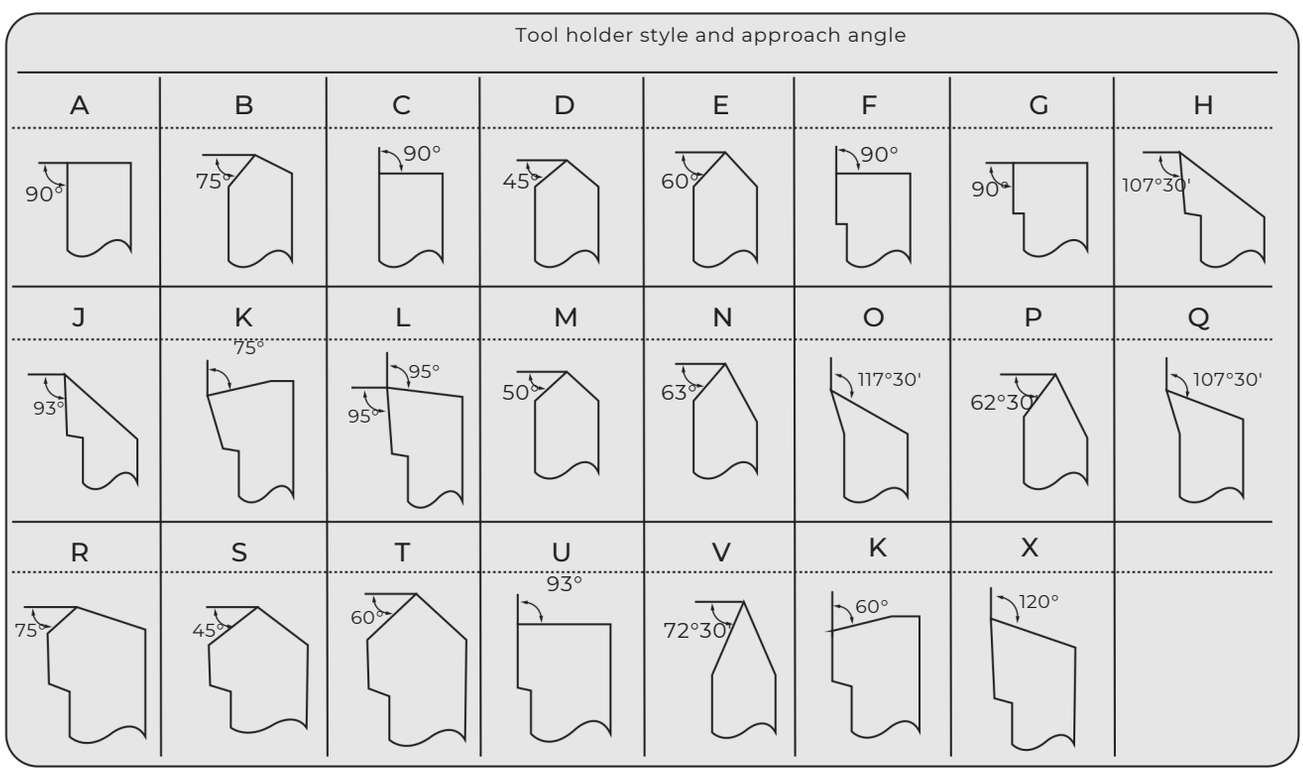
Tool holder style and approach angle
A
90°
B
75°
C
90°
D
45°
E
60°
F
90°
G
90°
H
107°30'
J
93°
K
75°
L
95°
95°
M
50°
N
63°
O
117°30'
P
62°30'
Q
107°30'
R
75°
S
45°
T
60°
U
93°
V
72°30'
K
60°
X
120°

Nose hight(mm)

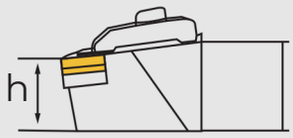

Code	Height
12	12
16	16
20	20
25	25
32	32
40	40
50	50

Width of tool holder(mm)

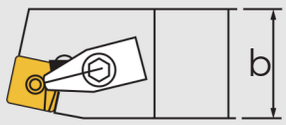

Code	Width
12	12
16	16
20	20
25	25
32	32
40	40
50	50

Length of tool holder(mm)

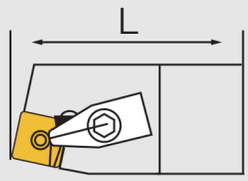

Code	Length
H	100
K	125
M	150
P	170
Q	180
R	200
S	250
T	300

25 25 M 12

Length of cutting edge

Inserts shape	C	D	R	S	T	V	W
							
Inscribed circle (mm)	Length of cutting edge (mm)						
5.556	---	---	---	---	09	---	---
6.350	06	07	---	---	11	---	---
9.525	09	11	09	09	16	16	06
12.700	12	15	12	12	22	22	08
15.875	16	19	15	15	27	---	---
19.050	19	---	19	19	33	---	---
25.400	25	---	25	25	44	---	---
32.000	---	---	32	---	---	---	---

External Turning Tool Holder

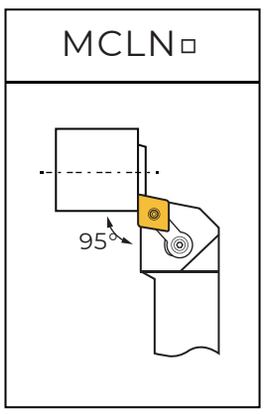

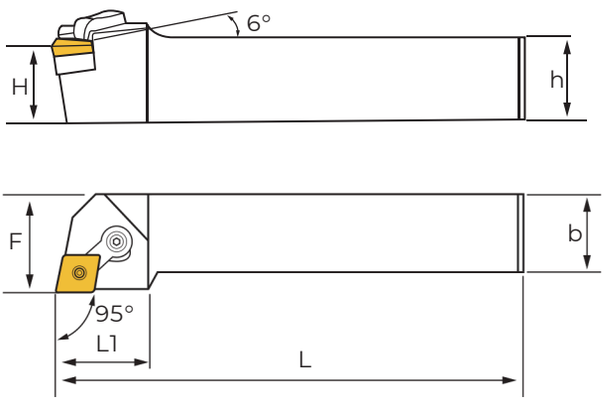

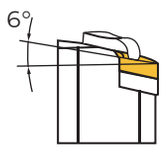

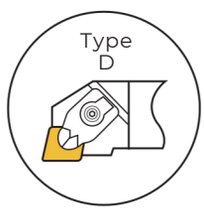

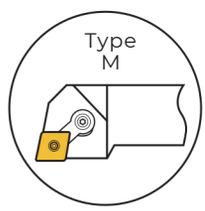

Order Number		Size (mm)					Insert	Shim	Lock Pin	Wrench	Clamp	Screw	Wrench
Left	Right	h	b	H	F	L							
MCLNL1616H09	MCLNR1616H09	16	16	16	20	100	CN:090308	MC0903	CTM513	L2	HL1813	ML0620	L3
MCLNL2020K09	MCLNR2020K09	20	20	20	25	125							
MCLNL1616H12	MCLNR1616H12	16	16	16	20	100	CN:120408	MC1204	CTM617	L2.5	HL1813	ML0625	L3
MCLNL2020K12	MCLNR2020K12	20	20	20	25	125							
MCLNL2525M12	MCLNR2525M12	25	25	25	92	150							
MCLNL3232P12	MCLNR3232P12	32	32	32	40	170							
MCLNL4040R12	MCLNR4040R12	40	40	40	50	200							
MCLNL2525M16	MCLNR2525M16	25	25	25	32	150	CN:160612	MC1604	CTM822	L3	HL2217	ML0830	L4
MCLNL3232P16	MCLNR3232P16	32	32	32	40	170							
MCLNL4040R16	MCLNR4040R16	40	40	40	50	200							
MCLNL5050S16	MCLNR5050S16	50	50	50	60	250							
MCLNL3232P19	MCLNR3232P19	32	32	32	40	170	CN:190612	MC1904	CTM1022	L4	HL2217	ML0830	L4
MCLNL4040R19	MCLNR4040R19	40	40	40	50	200							
MCLNL5050S19	MCLNR5050S19	50	50	50	60	250							

Order Number	Size (mm)						Insert	Shim	Screw	Clam p	Serew	Wrench	Spring
	h	b	L	L1	H	f							
DCLNR/L1616H12	16	16	100	32	16	20	CN:1204	MC1204	M6×10	D5260	DM5×21	L3.0	GB98-7
DCLNR/L2020K12	20	20	125	32	20	25							
DCLNR/L2525M12	25	25	150	32	25	32							
DCLNR/L3232P12	32	32	170	32	32	40							

External Turning Tool Holder

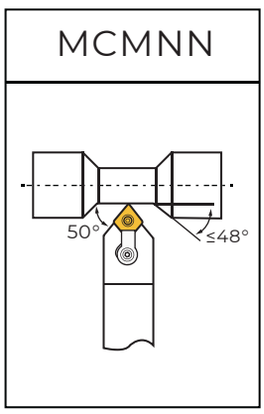

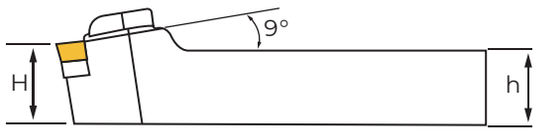

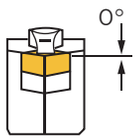

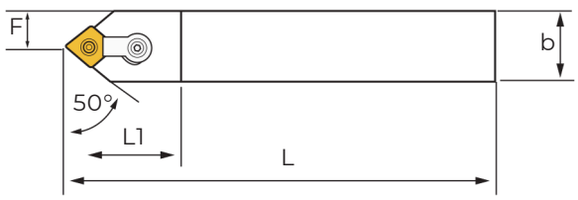

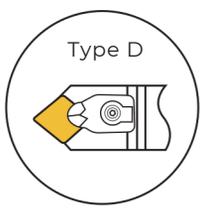

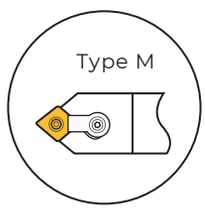

Order Number	Size (mm)					Insert	Shim	Lock Pin	Wrench	Clamp	Screw	Wrench
	h	b	H	F	L							
MCMNN2020K09	20	20	20	10	125	CN:090308	MC0903	CTM513	L2	HL1813	ML0620	L3
MCMNN2525M09	25	25	25	13	150							
MCMNN3232P09	32	32	32	16	170							
MCMNN2020K112	20	20	20	10	125	CN:120408	MC1204	CTM617	L2.5	HL1813	ML0625	L3
MCMNN2525M12	25	25	25	13	150							
MCMNN3232P12	32	32	32	16	170							
MCMNN2525M16	25	25	25	13	150	CN:160612	MC1604	CTM822	L3	HL2217	ML0830	L4
MCMNN3232P16	32	32	32	16	170							
MCMNN2525M19	25	25	25	13	150	CN:190612	MC1904	CTM1022	L4	HL2217	ML0830	L4
MCMNN3225P19	32	25	32	13	170							
MCMNN3232P19	32	32	32	16	170							
MCMNN4040R19	40	40	40	20	200							

Order Number	Size (mm)						Insert	Shim	Screw	Clamp	Serew	Wrench	Spring
	h	b	L	L1	H	f							
DCLNR/L2020K12	20	20	125	32	20	10	CN:1204	MC1204	M6×10	D5260	DM5×21	L3.0	GB98-7
DCLNR/L2525M12	25	25	150	32	25	12.5							
DCLNR/L3232P12	32	32	170	32	32	16							

External Turning Tool Holder

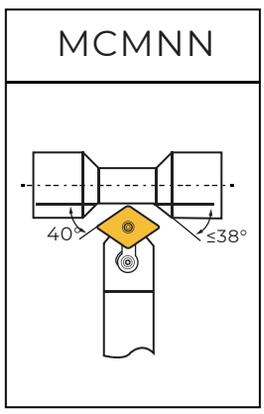

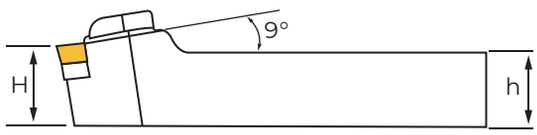

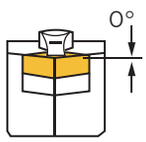

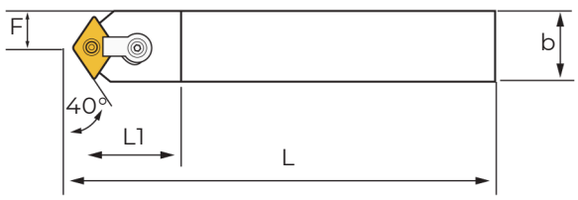

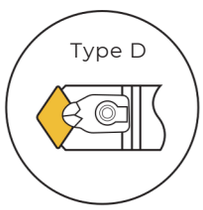

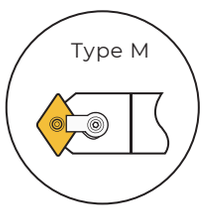

Order Number	Size (mm)					Insert	Shim	Lock Pin	Wrench	Clamp	Screw	Wrench
	h	b	H	F	L							
MCMNN2020K12-100	20	20	20	10	125	CN:120408	MC1204	CTM617	L2.5	HL1813	ML0625	L3
MCMNN2525M12-100	25	25	25	12.5	150	CN:120408	MC1204	CTM617	L2.5	HL1813	ML0625	L3
MCMNN3232P16-100	32	32	32	16	170	CN:160612	MC1604	CTM822	L3	HL1917	ML0830	L4
MCMNN4040P19-100	40	40	40	20	200	CN:190612	MC1904	CTM1022	L4	HL2217	ML0830	L4

Order Number	Size (mm)						Insert	Shim	Screw	Clamp	Serew	Wrench	Spring
	h	b	L	L1	H	F							
DCMNN2020K12-100	20	20	125	32	20	10	CN:1204	MC1204	M6×10	D5260	DM5×21	L3.0	GB98-7
DCMNN2525M12-100	25	25	150	32	25	12.5							
DCMNN3232P12-100	32	32	170	32	32	16							

External Turning Tool Holder

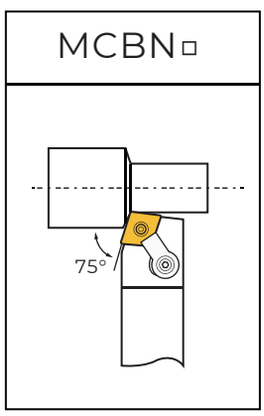

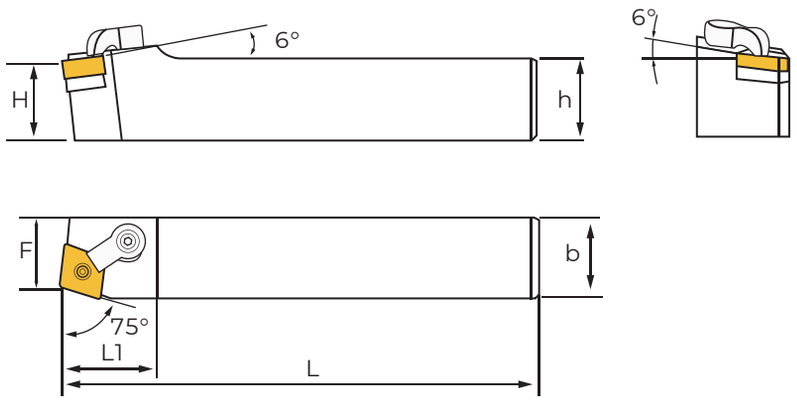

Order Number		Size (mm)					Insert	Shim	Lock Pin	Wrench	Clamp	Screw	Wrench
Left	Right	h	b	H	F	L							
MCBNL2020K12	MCBNR2020K12	20	20	20	17	125	CN:120408	MC1204	CTM617	L2.5	HL1813	ML0625	L3
MCBNL2525M12	MCBNR2525M12	25	25	25	22	150							
MCBNL3225P12	MCBNR3225P12	32	25	32	22	170							
MCBNL3232P12	MCBNR3232P12	32	32	32	27	170							
MCBNL2525M16	MCBNR2525M16	25	25	25	22	150	CN:160612	MC1604	CTM822	L3	HL1917	ML0830	L4
MCBNL3225P16	MCBNR3225P16	32	25	32	22	170							
MCBNL3232P16	MCBNR3232P16	32	32	32	27	170							

Order Number	Size (mm)						Insert	Shim	Screw	Clamp	Serew	Wrench	Spring
	h	b	L	L1	H	f							
DCBNR/L2020K12	20	20	125	32	20	10	CN:1204	MC1204	M6×10	D5260	DM5×21	L3.0	GB98-7
DCBNR/L2525M12	25	25	150	32	25	12.5							
DCBNR/L3232P12	32	32	170	32	32	16							

External Turning Tool Holder

MCFN□

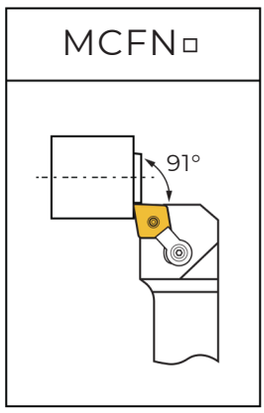

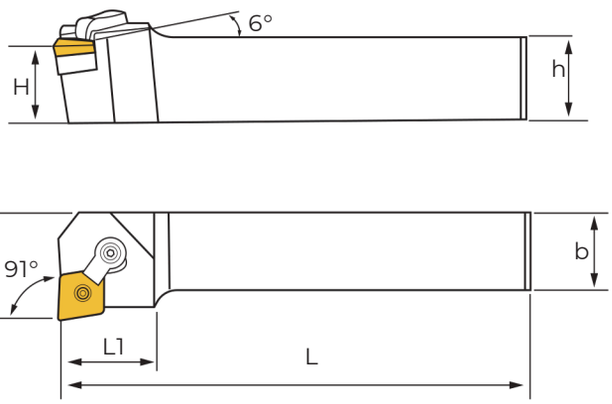

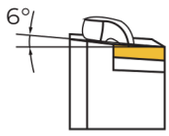

Order Number		Size (mm)					Insert	Shim	Lock Pin	Wrench	Clamp	Screw	Wrench
Le ft	Right	h	b	H	F	L							
MCFNL2020K12	MCFNR2020K12	20	20	20	25	125	CN:120408	MC1204	CTM617	L2.5	HL1813	ML0625	L3
MCFNL2525M12	MCFNR2525M12	25	25	25	32	150							
MCFNL3232P12	MCFNR3232P12	32	32	32	40	170							
MCFNL3232P16	MCFNR3232P16	32	32	32	40	170	CN:160612	MC1604	CTM822	L3	HL1917	ML0830	L4
MCFNL3232P19	MCFNR3232P19	25	32	32	40	170	CN:190612	MC1904	CTM1022	L4	HL2217	ML0830	L4

MCGN□

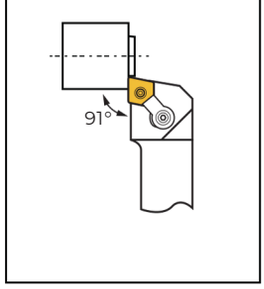

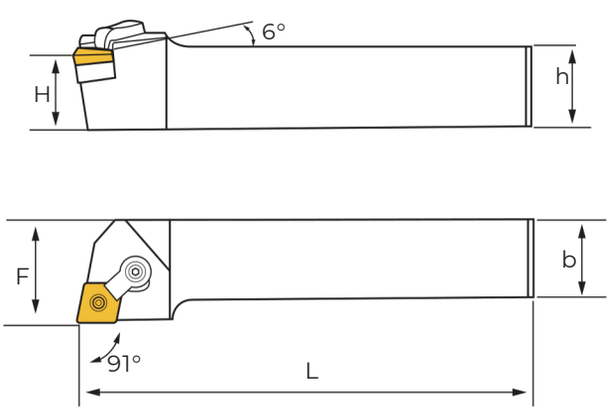

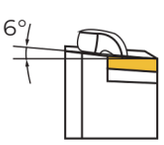

Order Number		Size (mm)					Insert	Shim	Lock Pin	Wrench	Clamp	Screw	Wrench
Left	Right	h	b	H	F	L							
MCGNL2020K12	MCGNR2020K12	20	20	20	25	125	CN:120408	MC1204	CTM617	L2.5	HL1813	ML0625	L3
MCGNL2525M12	MCGNR2525M12	25	25	25	32	150							
MCGNL3232P12	MCGNR3232P12	32	32	32	40	170							
MCGNL2525M16	MCGNR2525M16	25	25	25	32	150	CN:160612	MC1604	CTM822	L3	HL1917	ML0830	L4
MCGNL3232P16	MCGNR3232P16	32	32	32	40	170							
MCGNL2525M19	MCGNR2525M19	25	25	25	32	150	CN:190612	MC1904	CTM1022	L4	HL2217	ML0830	L4
MCGNL3232P19	MCGNR3232P19	32	32	32	40	170							

External Turning Tool Holder

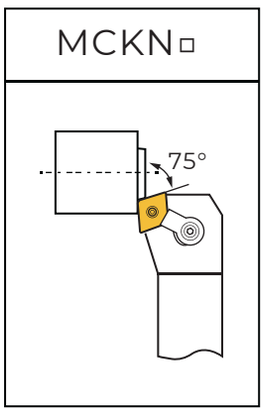

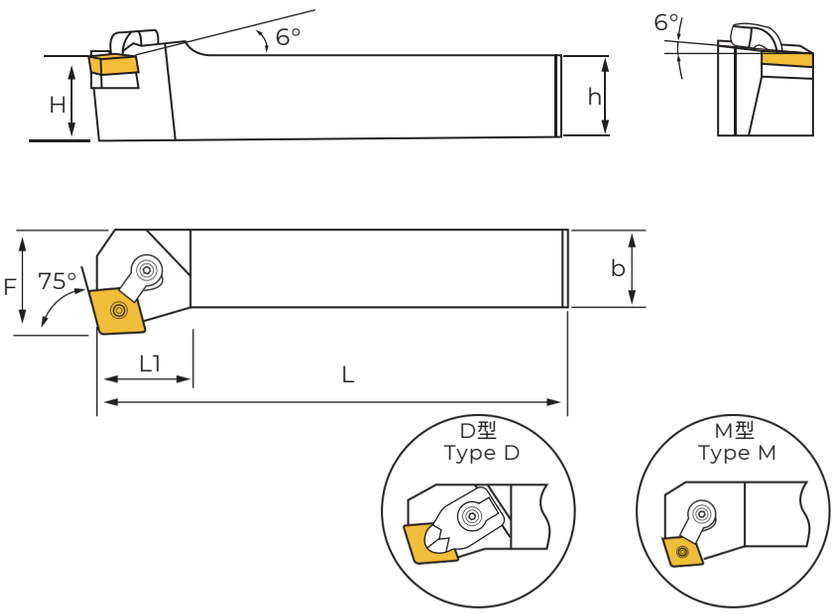

型号 Order Number		尺寸 Size (mm)					刀片 I nse rt	刀垫 Shi m	杠销 Lock Pin	扳手 Wrench	压板 Cla m p	双头螺栓 S cre w	扳手 Wrench
左刀/ Le ft	右刀/Right	h	b	H	F	L							
MCKNL2020K09	MCKNR2020K09	20	20	20	10	125	CN:090308	MC0903	CTM513	L2	HL1813	ML0620	L3
MCKNL2525M09	MCKNR2525M09	25	25	25	32	150							
MCKNL2020K12	MCKNR2020K12	20	20	20	25	125	CN:120408	MC1204	CTM617	L2.5	HL1813	ML0625	L3
MCKNL2525M12	MCKNR2525M12	25	25	25	32	150							
MCKNL3232P12	MCKNR3232P12	32	32	32	40	170							
MCKNL4040R12	MCKNR4040R12	40	40	40	50	200							
MCKNL2525M16	MCKNR2525M16	25	25	25	32	150	CN:160612	MC1604	CTM822	L3	HL1917	ML0830	L4
MCKNL3232P16	MCKNR3232P16	32	32	32	40	170							
MCKNL4040R16	MCKNR4040R16	40	40	40	50	200							
MCKNL2525M19	MCKNR2525M19	25	25	25	32	150	CN:190612	MC1904	CTM1022	L4	HL2217	ML0830	L4
MCKNL3232P19	MCKNR3232P19	32	32	32	40	170							
MCKNL4040R19	MCKNR4040R19	40	40	40	50	200							

型号 Order Number	尺寸 Size (mm)						刀片 I nse rt	刀垫 Shi m	刀垫螺钉 Serew	压板 Cla m p	压板螺钉 S cre w	扳手 Wrench	弹簧 S p ring
	h	b	L	L1	H	f							
DCKNR/L2020K12	20	20	125	32	20	25	CN:1204	MC1204	M6×10	D5260	DM5×21	L3.0	GB98-7
DCKNR/L2525M12	25	25	150	32	25	32							
DCKNR/L3232P12	32	32	170	32	32	40							

External Turning Tool Holder

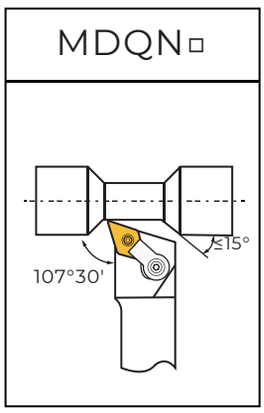

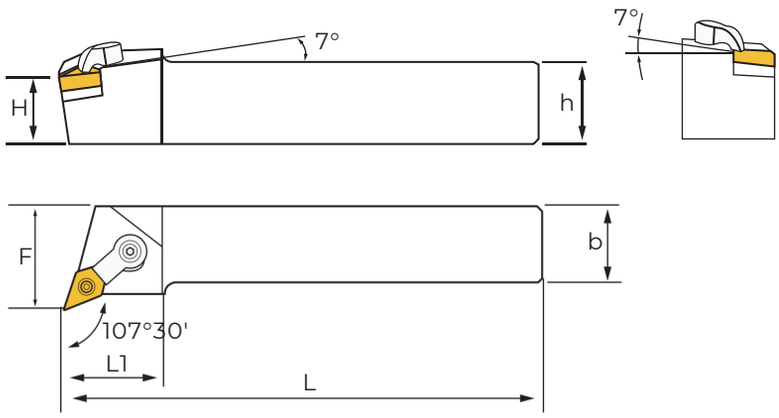

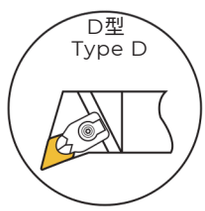

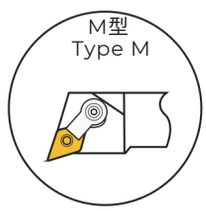

型号 Order Number		尺寸 Size (mm)					刀片 I nse rt	刀垫 Shi m	杠销 Lock Pin	扳手 Wrench	压板 Cla m p	双头螺栓 S cre w	扳手 Wrench
左刀/ Le ft	右刀/Right	h	b	H	F	L							
MDQNL1616H11	MDQNR1616H11	16	16	16	20	100	DN:110408	MD1103	CTM513	L2	HL2113	ML0620	L3
MDQNL2020K11	MDQNR2020K11	20	20	20	25	125							
MDQNL2525M11	MDQNR2525M11	25	25	25	32	150							
MDQNL3232P11	MDQNR3232P11	25	25	32	32	170							
MDQNL2020K15	MDQNR2020K15	20	20	20	25	125	DN:150408 DN:150608	MD1506 MD1504	CTM619	L2.5	HL2113	ML0625	L3
MDQNL2525M15	MDQNR2525M15	25	25	25	32	150							
MDQNL3225P15	MDQNR3225P15	32	25	32	32	170							
MDQNL3232P15	MDQNR3232P15	32	32	32	40	170							
MDQNL4040R15	MDQNR4040R15	40	40	40	50	200							

型号 Order Number	尺寸 Size (mm)						刀片 I nse rt	刀垫 Shi m	刀垫螺钉 Serew	压板 Cla m p	压板螺钉 S cre w	扳手 Wrench	弹簧 S p ring
	h	b	L	L1	H	f							
DDQNR/L2020K15	20	20	125	32	20	25	DN:1504 DN:1506	MD1506 MD1504	M6×10	D5260	DM5×21	L3.0	GB98-7
DDQNR/L2525M15	25	25	150	32	25	32							
DDQNR/L3232P15	32	32	170	32	32	40							

外圆车刀杆

External Turning Tool Holder

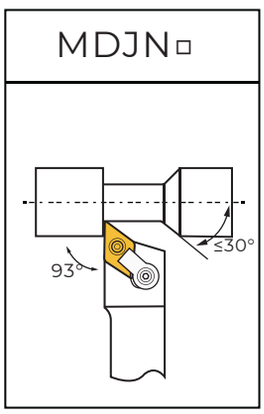

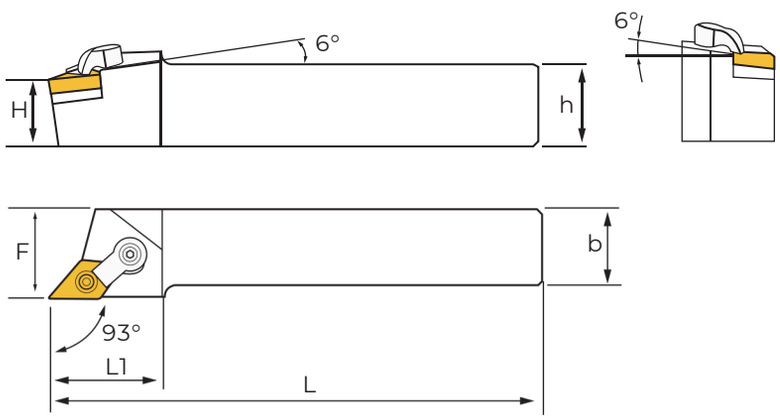

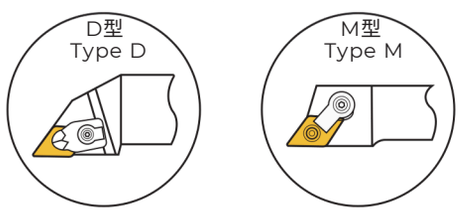

型号 Order Number		尺寸 Size (mm)					刀片 I nse rt	刀垫 Shi m	杠销 Lock Pin	扳手 Wrench	压板 Cla m p	双头螺栓 S cre w	扳手 Wrench
左刀/ Le ft	右刀/Right	h	b	H	F	L							
MDJNL1616H11	MDJNR1616H11	16	16	16	20	100	DN:110408	MD1103	CTM513	L2	HL2113	ML0625	L3
MDJNL2020K11	MDJNR2020K11	20	20	20	25	125							
MDJNL2525M11	MDJNR2525M11	25	25	25	32	150							
MDJNL3232P11	MDJNR3232P11	32	32	32	40	170							
MDJNL4040R11	MDJNR4040R11	40	40	40	50	200							
MDJNL2020K15	MDJNR2020K15	20	20	20	25	125	DN:150408 DN:150608	MD1506 MD1504	CTM619	L2.5	HL2113	ML0625	L3
MDJNL2525M15	MDJNR2525M15	25	25	25	32	150							
MDJNL3232P15	MDJNR3232P15	32	32	32	40	170							
MDJNL4040R15	MDJNR4040R15	40	40	40	50	200							

型号 Order Number	尺寸 Size (mm)						刀片 I nse rt	刀垫 Shi m	刀垫螺钉 Serew	压板 Cla m p	压板螺钉 S cre w	扳手 Wrench	弹簧 S p ring
	h	b	L	L1	H	f							
DDJNR/L1616H11	16	16	100	32	16	20	DN:1104	MD1103	M5×9	D3230	DM5×21	L3.0	GB98-7
DDJNR/L2020K11	20	20	125	32	20	25							
DDJNR/L2525K11	25	25	150	32	25	32							
DDJNR/L2020K15	32	32	170	32	32	40	DN:1504 DN:1506	MD1506 MD1504	M6×10	D5260	DM5×21	L3.0	GB98-7
DDJNR/L2525M15	25	25	150	35	35	32							
DDJNR/L3232P15	32	32	170	35	32	40							

External Turning Tool Holder

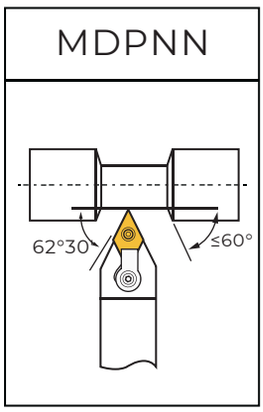

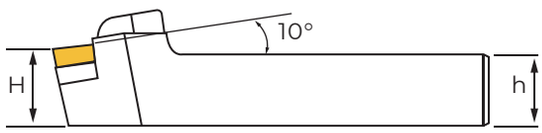

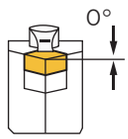

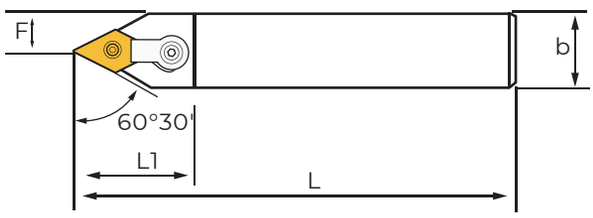

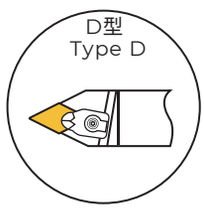

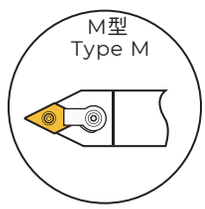

型号 Order Number	尺寸 Size (mm)					刀片 I nse rt	刀垫 Shi m	杠销 Lock Pin	扳手 Wrench	压板 Cla m p	双头螺栓 S cre w	扳手 Wrench
	h	b	H	F	L		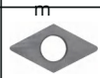					
MDPNN1616H11	16	16	16	8	100	DN:110408	MD1103	CTM513	L2	HL2113	ML0625	L3
MDPNN2020K11	20	20	20	10	125							
MDPNN2525M11	25	25	25	13	150							
MDPNN3232P11	32	32	32	16	170							
MDPNN4040R11	40	40	40	20	200							
MDPNN2525M15	25	25	25	13	150	DN:150408 DN:150608	MD1506 MD1504	CTM619	L2.5	HL2113	ML0625	L3
MDPNN3225P15	32	25	32	13	170							
MDPNN3232P15	32	32	32	16	170							
MDPNN4040R15	40	40	40	20	200							

型号 Order Number	尺寸 Size (mm)						刀片 I nse rt	刀垫 Shi m	刀垫螺钉 Serew	压板 Cla m p	压板螺钉 S cre w	扳手 Wrench	弹簧 S p ring
	h	b	L	L1	H	f		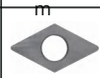					
DDPNN1616H11	16	16	100	32	16	8	DN:1104	MD1103	M6×10	D3230	DM5×21	L3.0	GB98-7
DDPNN2020K11	20	20	125	32	20	10							
DDPNN2525M11	25	25	150	32	25	12.5							
DDPNN2020K15	20	20	125	35	20	10	DN:1504 DN:1506	MD1506 MD1504	M6×10	D5260	DM5×21	L3.0	GB98-7
DDPNN2525M15	25	25	150	35	25	12.5							
DDPNN3232P15	32	32	170	35	32	16							

External Turning Tool Holder

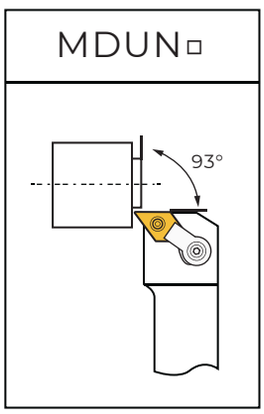

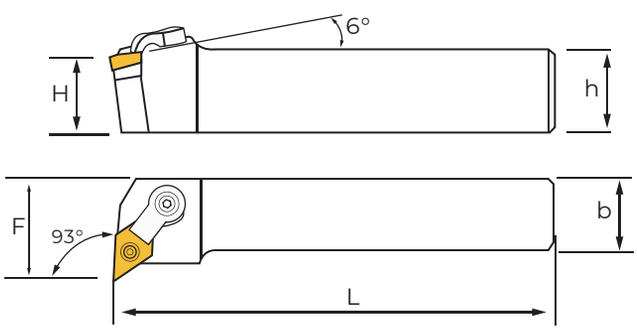

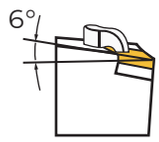

Order Number		Size (mm)					Insert	Shim	Lock Pin	Wrench	Clamp	Screw	Wrench
Left	Right	h	b	H	F	L							
MDUNL1616H11	MDUNR1616H11	16	16	16	20	100	DN:110408	MD1103	CTM513	L2.0	HL2113	ML0625	L3
MDUNL2020K11	MDUNR2020K11	20	20	20	25	125							
MDUNL2525M11	MDUNR2525M11	25	25	25	32	150							
MDUNL3225P11	MDUNR3225P11	32	25	32	32	170							
MDUNL202015	MDUNR202015	20	20	20	25	125	DN:150408 DN:150608	MD1506 MD1504	CTM619	L2.5	HL2113	ML0625	L3
MDUN2525M15	MDUN2525M15	25	25	25	32	150							
MDUNL3225P15	MDUNR3225P15	32	25	32	32	170							
MDUNL3232P15	MDUNR3232P15	32	32	32	40	170							
MDUNL4040R15	MDUNR4040R15	40	40	40	50	200							

External Turning Tool Holder

MSBN□

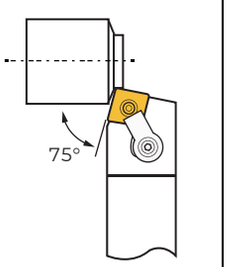

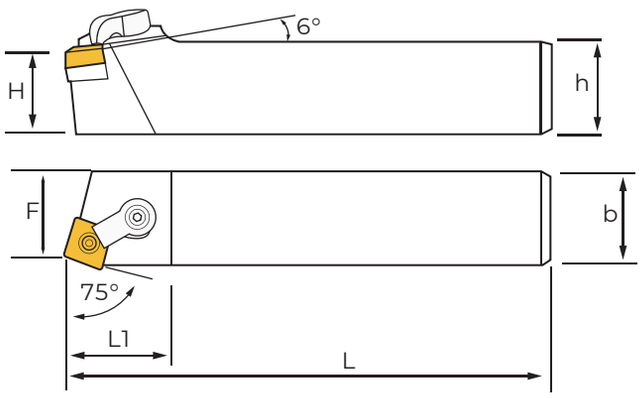

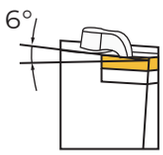

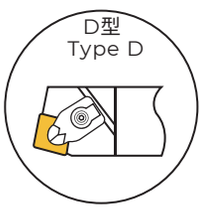

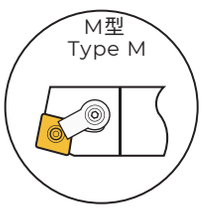

型号 Order Number		尺寸 Size (mm)					刀片 I nse rt	刀垫 Shi m	杠销 Lock Pin	扳手 Wrench	压板 Cla m p	双头螺栓 S cre w	扳手 Wrench
左刀/ Le ft	右刀/Right	h	b	H	F	L							
MS BNL1616H09	MSBNR1616H09	16	16	16	13	100	SN:090308	MS0903	CTM513	L2	HL1813	ML0620	L3
MS BNL2020K09	MSBNR2020K09	20	20	20	17	125							
MSBNL2525M09	MSBNR2525M09	25	25	25	22	150							
MS BNL2020K12	MSBNR2020K12	20	20	20	17	125	SN:120408	MS1204	CTM617	L2.5	HL1813	ML0625	L3
MSBNL2525M12	MSBNR2525M12	25	25	25	22	150							
MS BNL3225P12	MSBNR3225P12	32	25	32	22	170							
MS BNL3232P12	MSBNR3232P12	32	32	32	27	170							
MSBNL2525M15	MSBNR2525M15	25	25	25	22	150	SN:150612	MS1504	STM822	L3	HL1917	ML0830	L4
MS BNL3225P15	MSBNR3225P15	32	25	32	22	170							
MS BNL3232P15	MSBNR3232P15	32	32	32	27	170							
MSBNL3232P19	MSBNR3232P19	32	32	32	27	170							
MSBNL4040R19	MSBNR4040R19	40	40	40	35	200	SN:190612	MS1904	CTM1022	L4	HL2217	ML0830	L4

型号 Order Number	尺寸 Size (mm)						刀片 I nse rt	刀垫 Shi m	刀垫螺钉 Serew	压板 Cla m p	压板螺钉 S cre w	扳手 Wrench	弹簧 S p ring
	h	b	L	L1	H	f							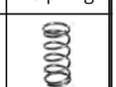
DSBNR/L2020K12	20	20	125	32	20	17	SN:1204	MS1204	M6×10	D5260	DM5×21	L3.0	GB98-7
DSBNR/L2525M12	25	25	150	32	25	22							
DSBNR/L3232P12	32	32	170	32	32	27							

External Turning Tool Holder

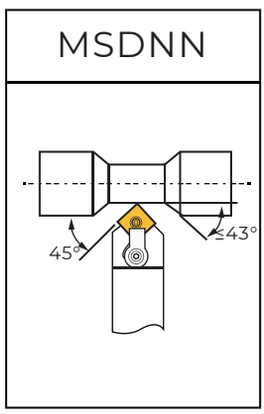

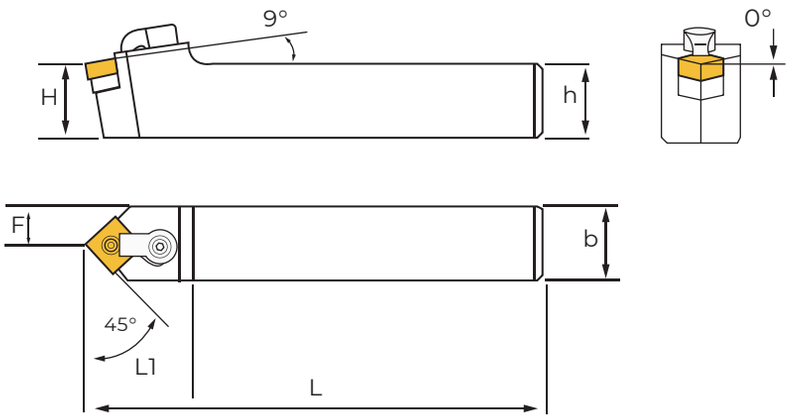

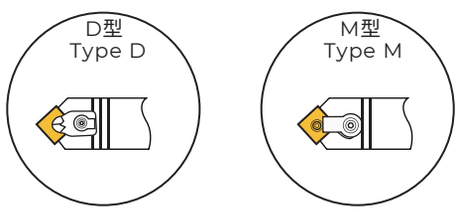

型号 Order Number	尺寸 Size (mm)					刀片 I nse rt	刀垫 Shi m	杠销 Lock Pin	扳手 Wrench	压板 Cla m p	双头螺栓 S cre w	扳手 Wrench
	h	b	H	F	L							
MS DNN2020K12	20	20	20	10	125	SN:120408	MS1204	CTM617	L2.5	HL1813	ML0625	L3
MSDNN2525M12	25	25	25	13	150							
MSDNN3232P12	32	32	32	16	170							
MSDNN2525M15	25	25	25	13	150	SN:150612	MS1504	CTM822	L3	HL1917	ML0830	L4
MSDNN3232P15	32	32	32	16	170							
MSDNN4040R15	40	40	40	20	200							
MSDNN3232P19	32	32	32	16	170	SN:190612	MS1904	CTM1022	L4	HL2217	ML0830	L4
MSDNN4040R19	40	40	40	20	200							

型号 Order Number	尺寸 Size (mm)						刀片 I nse rt	刀 垫 Shim	刀垫螺钉 Serew	压板 Cla m p	压板螺钉 S cre w	扳手 Wrench	弹簧 S p ring
	h	b	L	L1	H	f							
DSDNN1616H12	16	16	100	34	16	8	SN:1204	MS1204	M6×10	D5260	DM5×21	L3.0	GB98-7
DSDNN2020K12	20	20	125	34	20	10							
DSDNN2525M12	25	25	150	34	25	12.5							
DSDNN3232P12	32	32	170	34	32	16							

External Turning Tool Holder

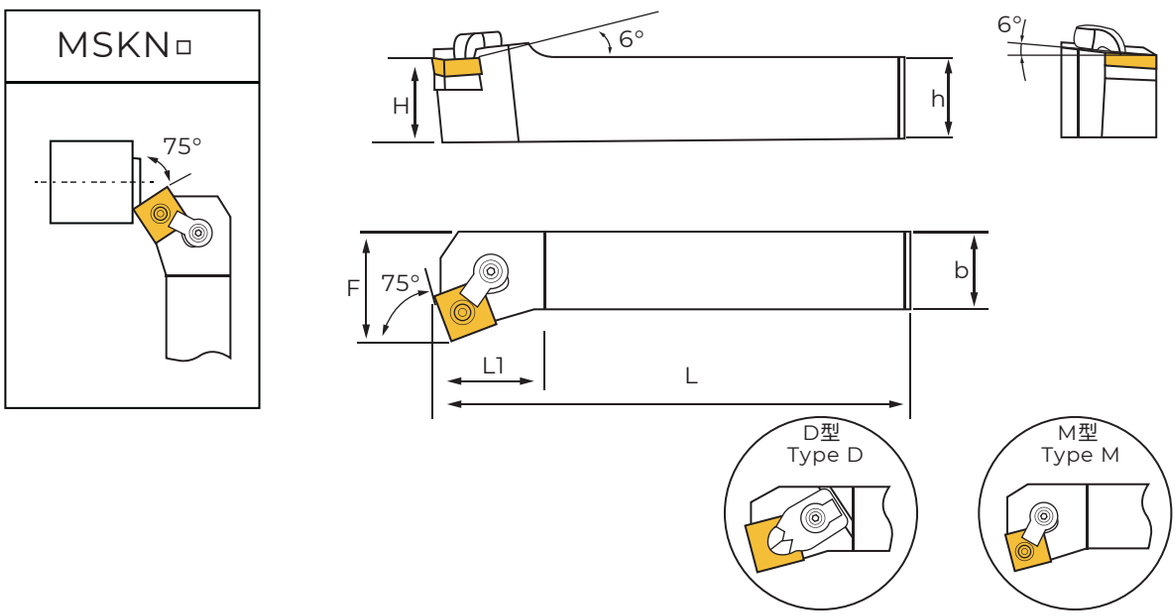

型号 Order Number		尺寸 Size (mm)					刀片 I nse rt	刀垫 Shi m	杠销 Lock Pin	扳手 Wrench	压板 Cla m p	双头螺栓 S cre w	扳手 Wrench
左刀/ Le ft	右刀/Right	h	b	H	F	L							
MS KNL1616H09	MSKNR1616H09	16	16	16	20	100	SN:090308	MS0903	CTM513	L2	HL1813	ML0620	L3
MS KNL2020K09	MSKNR2020K09	20	20	20	25	125							
MS KNL1616H12	MSKNR1616H12	16	16	16	20	100	SN:120408	MS1204	CTM617	L2.5	HL1813	ML0625	L3
MS KNL2020K12	MSKNR2020K12	20	20	20	25	125							
MSKNL2525M12	MSKNR2525M12	25	25	25	32	150							
MS KNL3232P12	MSKNR3232P12	32	32	32	40	170							
MSKNL2525M15	MSKNR2525M15	25	25	25	32	150	SN:150612	MS1504	STM822	L3	HL1917	ML0830	L4
MS KNL3232P15	MSKNR3232P15	32	32	32	40	170							
MS KNL3232P19	MSKNR3232P19	32	32	32	40	170	SN:190612	MS1904	CTM1022	L4	HL2217	ML0830	L4
MSKNL4040R19	MSKNR4040R19	40	40	40	50	200							

型号 Order Number	尺寸 Size (mm)						刀片 I nse rt	刀垫 Shi m	刀垫螺钉 Serew	压板 Cla m p	压板螺钉 Screw	扳手 Wrench	弹簧 S p ring
	h	b	L	L1	H	f							
DSKNL/R2020K12	20	20	125	26	20	25	SN:1204	MS1204	M6×10	D5260	DM5×21	L3.0	GB98-7
DSKNL/R2525M12	25	25	150	26	25	32							
DSKNL/R3232P12	32	32	170	26	32	40							

External Turning Tool Holder

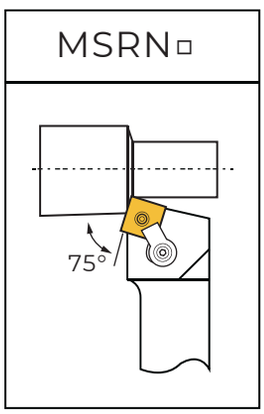

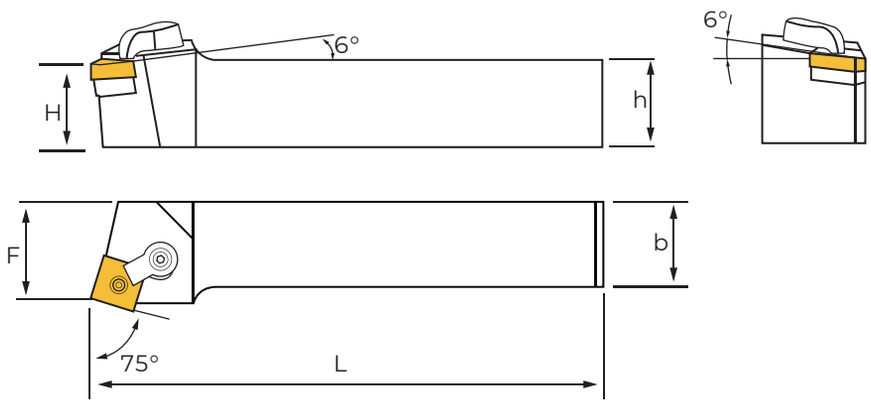

型号 Order Number		尺寸 Size (mm)					刀片 I nse rt	刀垫 Shi m	杠销 Lock Pin	扳手 Wrench	压板 Cla m p	双头螺栓 S cre w	扳手 Wrench
左刀/ Le ft	右刀/Right	h	b	H	F	L							
MS R NL1616H09	MS R NR 1616H09	16	16	16	17	100	SN:090308	MS0903	CTM513	L2	HL1813	ML0620	L3
MSRNL2020K09	MSRNR2020K09	20	20	20	22	125							
MSRNL2020K12	MSRNR2020K12	20	20	20	22	125	S N:120408	MS1204	CTM617	L2.5	HL1813	ML0625	L3
MSRNL2525M12	MSRNR2525M12	25	25	25	27	150							
MSRNL3232P12	MSRNR3232P12	32	32	32	35	170							
MSRNL2525M15	MSRNR2525M15	25	25	25	27	150	SN:150612	MS1504	STM822	L3	HL1917	ML0830	L4
MSRNL3232P15	MSRNR3232P15	32	32	32	35	170							
MSRNL4040R15	MSRNR4040R15	40	40	40	43	200							
MSRNL3232P19	MSRNR3232P19	32	32	32	35	170	SN:190612	MS1904	CTM1022	L4	HL2217	ML0830	L4
MSRNL4040R19	MSRNR4040R19	40	40	40	43	200							

External Turning Tool Holder

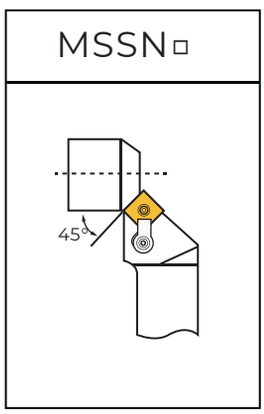

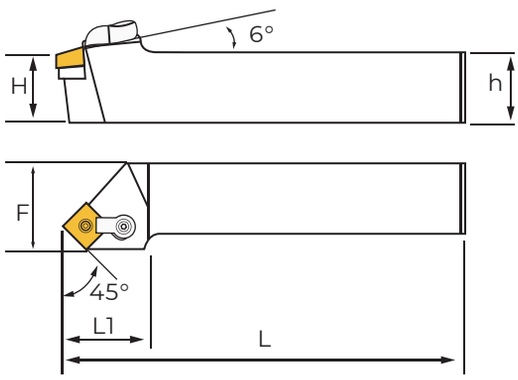

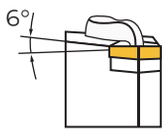

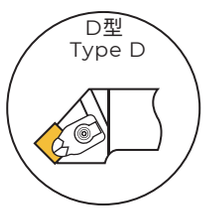

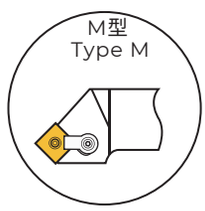

型号 Order Number		尺寸 Size (mm)					刀片 I nse rt	刀垫 Shi m	杠销 Lock Pin	扳手 Wrench	压板 Cla m p	双头螺栓 S cre w	扳手 Wrench
左刀/ Le ft	右刀/Right	h	b	H	F	L				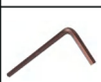			
MSSNL1616H09	MSSNR1616H09	16	16	16	20	100	SN:090308	MS0903	CTM513	L2	HL1813	ML0620	L3
MSSNL2020K09	MSSNR2020K09	20	20	20	25	125							
MSSNL1616H12	MSSNR1616H12	16	16	16	20	125	SN:120408	MS1204	CTM617	L2.5	HL1813	ML0625	L3
MSSNL2020K12	MSSNR2020K12	20	20	20	25	125							
MSSNL2525M12	MSSNR2525M12	25	25	25	32	150							
MSSNL3232P12	MSSNR3232P12	32	32	32	40	170							
MSSNL2525M15	MSSNR2525M15	25	25	25	32	150	SN:150612	MS1504	STM822	L3	HL1917	ML0830	L4
MSSNL3232P15	MSSNR3232P15	32	32	32	40	170							
MSSNL4040R15	MSSNR4040R15	40	40	40	50	200							
MSSNL3232P19	MSSNR3232P19	32	32	32	40	170	SN:190612	MS1904	CTM1022	L4	HL2217	ML0830	L4
MSSNL4040R19	MSSNR4040R19	40	40	40	50	200							

型号 Order Number	尺寸 Size (mm)						刀片 I nse rt	刀垫 Shi m	刀垫螺钉 Serew	压板 Cla m p	压板螺钉 S cre w	扳手 Wrench	弹簧 S p ring
	h	b	L	L1	H	f						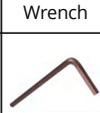	
DSSNR/L2020K12	20	20	125	26	20	25	SN:1204	MS1204	M6×10	D5260	DM5×21	L3.0	GB98-7
DSSNR/L2525M12	25	25	150	26	25	32							
DSSNR/L3232P12	32	32	170	26	32	40							

External Turning Tool Holder

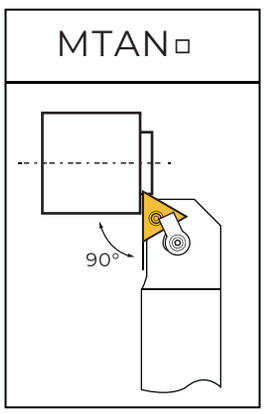

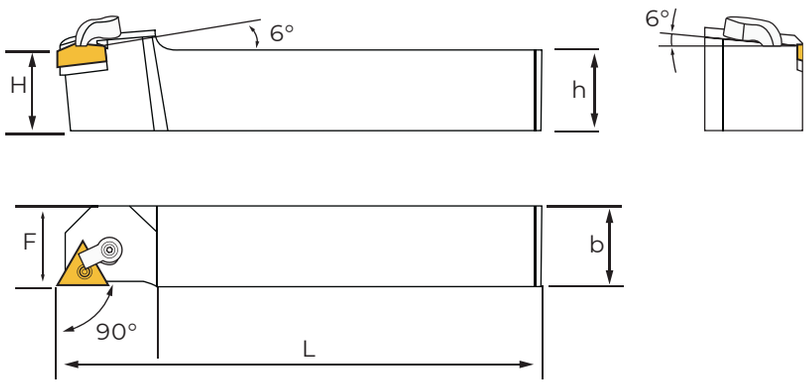

型号 Order Number		尺寸 Size (mm)					刀片 I nse rt	刀垫 Shi m	杠销 Lock Pin	扳手 Wrench	压板 Cla m p	双头螺栓 S cre w	扳手 Wrench
左刀/ Le ft	右刀/Right	h	b	H	F	L							
MTANL2020K16	MTANR2020K16	20	20	20	20	125	TN:160408	MT1603	CTM513	L2	HL1813	ML0620	L3
MTANL2525M16	MTANR2525M16	25	25	25	25	150							
MTANL3225P16	MTANR3225P16	32	25	32	32	170							
MTANL3232P16	MTANR3232P16	32	32	32	32	170							
MTANL3232P22	MTANR3232P22	32	32	32	32	170	TN:220408	MT2204	CTM617	L2.5	HL1813	ML0830	L4
MTANL4040R22	MTANR4040R22	40	40	40	40	200							

External Turning Tool Holder

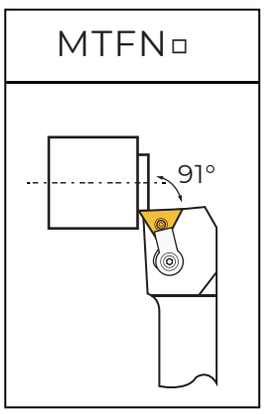

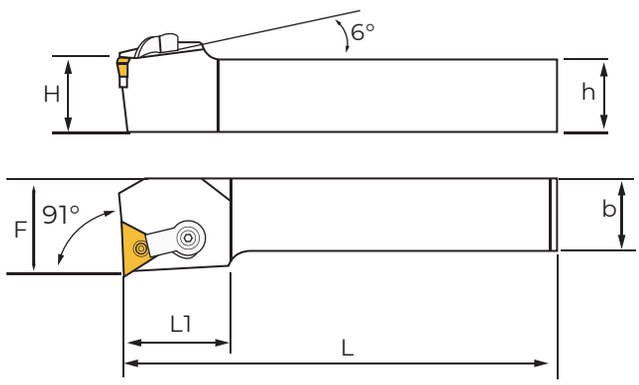

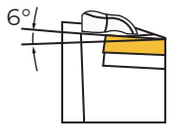

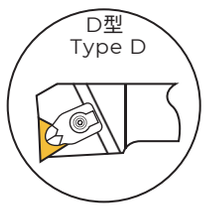

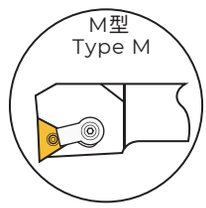

型号 Order Number		尺寸 Size (mm)					刀片 I nse rt	刀垫 Shi m	杠销 Lock Pin	扳手 Wrench	压板 Cla m p	双头螺栓 S cre w	扳手 Wrench
左刀/ Le ft	右刀/Right	h	b	H	F	L							
MTFNL1616H16	MT FNR 1616H16	16	16	16	20	100	TN:160408	MT1603	CTM513	L2	HL1813	ML0625	L3
MTFNL2020K16	MTFNR2020K16	20	20	20	25	125							
MTFNL2525M16	MTFNR2525M16	25	25	25	32	150							
MTFNL3225P16	MTFNR3225P16	32	25	32	32	170							
MTFNL3232P16	MTFNR3232P16	32	32	32	32	170							
MTFNL2020K22	MTFNR2020K22	20	20	20	25	125	TN:220408	MT2204	CTM617	L2.5	HL1917	ML0830	L4
MTFNL2525M22	MTFNR2525M22	25	25	25	32	150							
MTFNL3225P22	MTFNR3225P22	32	25	32	32	170							
MTFNL3232P22	MTFNR3232P22	32	32	32	40	170							
MTFNL4040R22	MTFNR4040R22	40	40	40	50	200							

型号 Order Number	尺寸 Size (mm)						刀片 I nse rt	刀垫 Shi m	刀垫螺钉 Serew	压板 Cla m p	压板螺钉 S cre w	扳手 Wrench	弹簧 S p ring
	h	b	L	L1	H	f		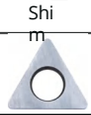				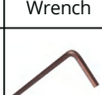	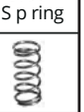
DTFNL/R1616H16	16	16	100	28	16	20	TN:1604	MT1603	M5×9	D3230	DM5×21	L3.0	GB98-7
DTFNL/R2020K16	20	20	125	28	20	25							
DTFNL/R2525M16	25	25	150	28	25	32							
DTFNL/R3232P16	32	32	170	28	32	40							

External Turning Tool Holder

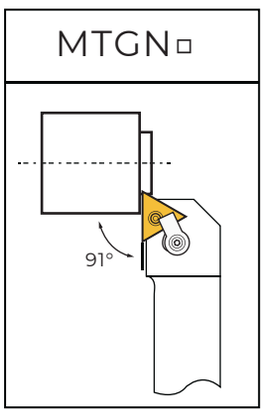

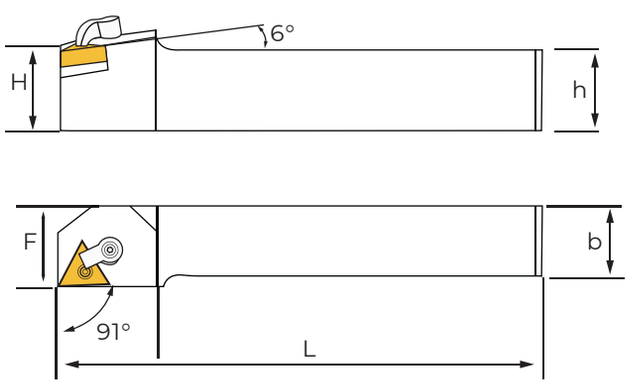

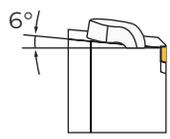

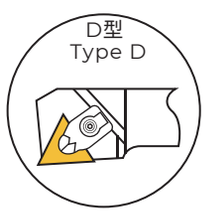

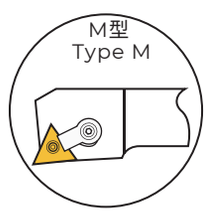

型号 Order Number		尺寸 Size (mm)					刀片 I nse rt	刀垫 Shi m	杠销 Lock Pin	扳手 Wrench	压板 Cla m p	双头螺栓 S cre w	扳手 Wrench
左刀/ Le ft	右刀/Right	h	b	H	F	L							
MTGNL1616H16	MT GNR 1616H16	16	16	16	20	100	TN:160408	MT1603	CTM513	L2	HL1813	ML0625	L3
MTGNL2020K16	MTGNR2020K16	20	20	20	25	125							
MTGNL2525M16	MTGNR2525M16	25	25	25	32	150							
MTGNL3225P16	MTGNR3225P16	32	25	32	32	170							
MTGNL3232P16	MTGNR3232P16	32	32	32	40	170							
MTGNL2020K22	MTGNR2020K22	20	20	20	25	125	TN:220408	MT2204	CTM617	L2.5	HL1917	ML0830	L4
MTGNL2525M22	MTGNR2525M22	25	25	25	32	150							
MTGNL3225P22	MTGNR3225P22	32	25	32	32	170							
MTGNL3232P22	MTGNR3232P22	32	32	32	40	170							
MTGNL3232P22	MTGNR3232P22	40	40	40	50	200							

型号 Order Number	尺寸 Size (mm)						刀片 I nse rt	刀垫 Shi m	刀垫螺钉 Serew	压板 Cla m p	压板螺钉 S cre w	扳手 Wrench	弹簧 S p ring
	h	b	L	L1	H	F							
DTGNR/L1616H16	16	16	100	28	16	20	TN:1604	MT1603	M5×9	D3230	DM5×21	L3.0	GB98-7
DTGNT/L2020K16	20	20	125	28	20	25							
DTGNR/L2525M16	25	25	150	28	25	32							
DTGNR/L3232P16	32	32	170	28	32	40							

External Turning Tool Holder

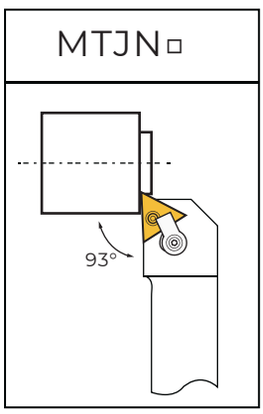

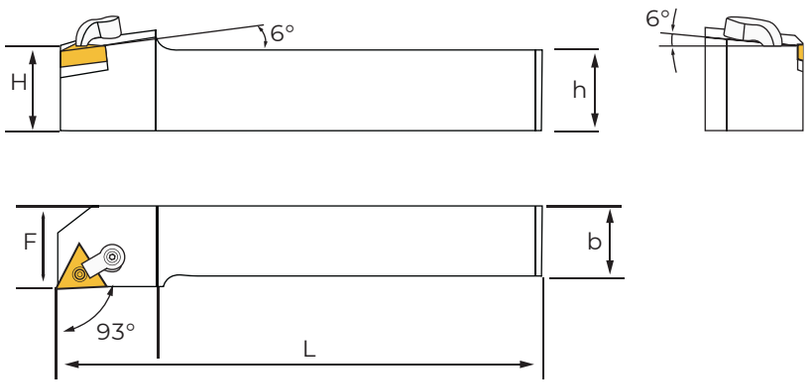

型号 Order Number		尺寸 Size (mm)					刀片 I nse rt	刀垫 Shi m	杠销 Lock Pin	扳手 Wrench	压板 Cla m p	双头螺栓 S cre w	扳手 Wrench
左刀/ Le ft	右刀/Right	h	b	H	F	L							
MTJNL1616H16-S	MTJNR1616H16-S	16	1	16	20	100	TN:160408	MT1603	CTM513	L2	HL1813	ML0625	L3
MTJNL2020K16-S	MTJNR2020K16-S	20	20	20	25	125							
MTJNL2525M16-S	MTJNR2525M16-S	25	25	25	32	150							
MTJNL3235P16-S	MTJNR3235P16-S	32	25	32	32	170							
MTJNL3232P16-S	MTJNR3232P16-S	32	32	32	40	170							
MTJNR2525M22-S	MTJNR2525M22-S	25	25	25	32	150	TN:220408	MT2204	CTM617	L2.5	HL1917	ML0830	L4
MTJNR3225P22-S	MTJNR3225P22-S	32	25	32	32	170							
MTJNR3232P22-S	MTJNR3232P22-S	32	32	32	40	170							

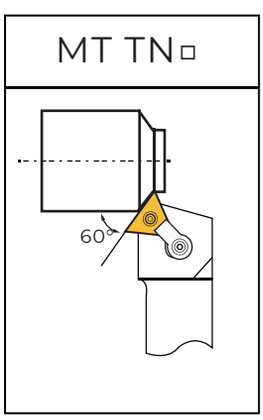

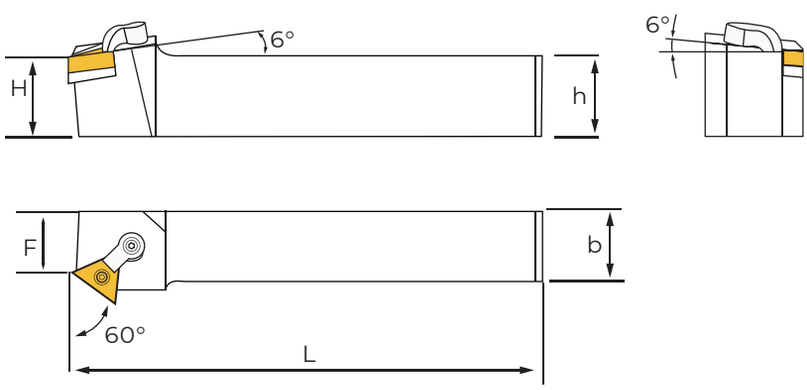

型号 Order Number		尺寸 Size (mm)					刀片 I nse rt	刀垫 Shi m	杠销 Lock Pin	扳手 Wrench	压板 Cla m p	双头螺栓 S cre w	扳手 Wrench
左刀/ Le ft	右刀/Right	h	b	H	F	L							
MTTNL2020K16	MTTNR2020K16	20	20	20	17	125	TN:160408	MT1603	CTM513	L2	HL1813	ML0625	L3
MTTNL2525M16	MTTNR2525M16	25	25	25	22	150							
MTTNL3232P22	MTTNR3232P22	32	32	32	27	170	TN:220408	MT2204	CTM617	L2.5	HL1813	ML0830	L4

External Turning Tool Holder

MTRN□

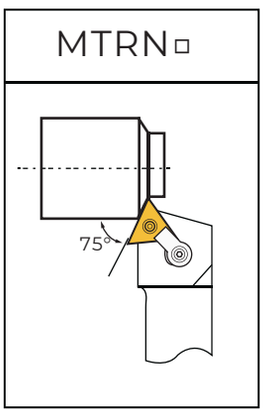

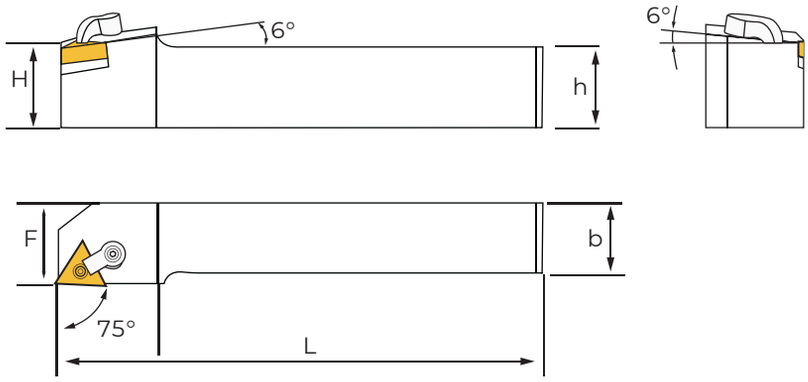

型号 Order Number		尺寸 Size (mm)					刀片 I nse rt	刀垫 Shi m	杠销 Lock Pin	扳手 Wrench	压板 Cla m p	双头螺栓 S cre w	扳手 Wrench
左刀/ Le ft	右刀/Right	h	b	H	F	L							
MTRNL1616H16	MTRNR1616H16	16	16	16	17	100	TN:160408	MT1603	CTM513	L2	HL1813	ML0625	L3
MTRNL2020K16	MTRNR2020K16	20	20	20	22	125							
MTRNL2525M15	MTRNR2525M15	25	25	25	27	150							
MTRNL3225P16	MTRNR3225P16	32	25	32	27	170							
MTRNL3232P16	MTRNR3232P16	32	32	32	35	170							
MTRNL2525M22	MTRNR2525M22	25	25	25	27	150	TN:220408	MT2204	CTM617	L2.5	HL1917	ML0830	L4
MTRNL3225P22	MTRNR3225P22	32	25	32	27	170							
MTRNL3232P22	MTRNR3232P22	34	32	32	35	170							

MTBN□

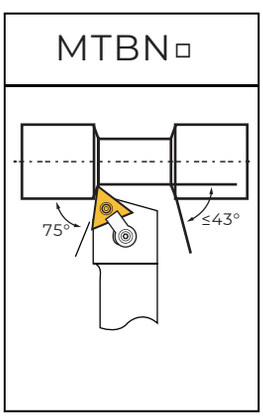

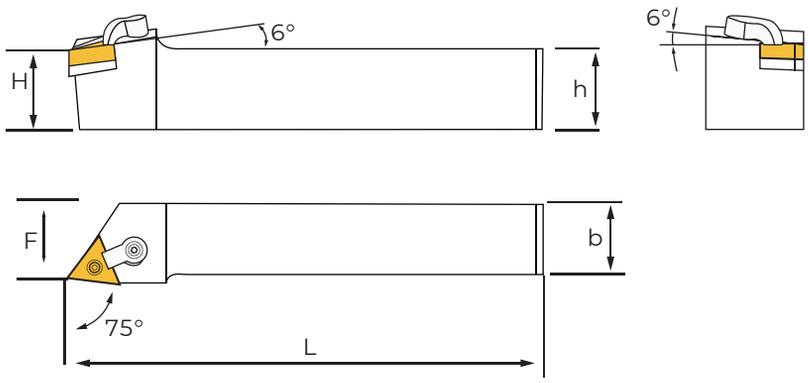

型号 Order Number		尺寸 Size (mm)					刀片 I nse rt	刀垫 Shi m	杠销 Lock Pin	扳手 Wrench	压板 Cla m p	双头螺栓 S cre w	扳手 Wrench
左刀/ Le ft	右刀/Right	h	b	H	F	L		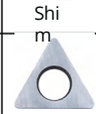					
MT BNL2020K16	MTBNR2020K16	20	20	20	25	125	TN:160408	MT1603	CTM513	L2	HL1813	ML0625	L3
MTBNL2525M22	MTBNR2525M22	25	25	25	27	150	TN:220408	MT2204	CTM617	L2.5	HL1917	ML0830	L4

External Turning Tool Holder

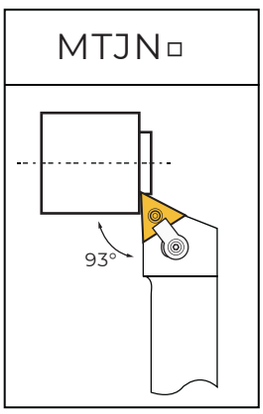

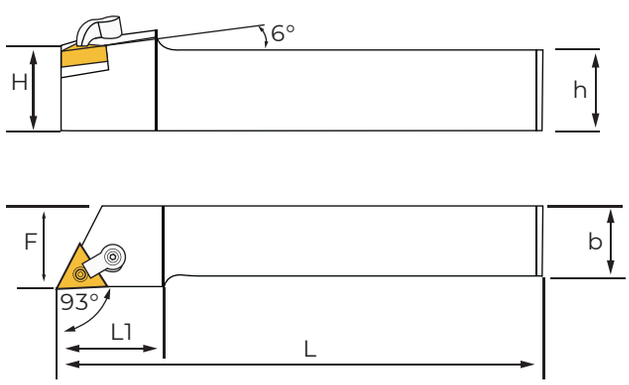

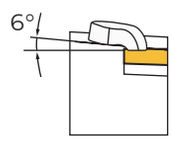

019

W型
Type W

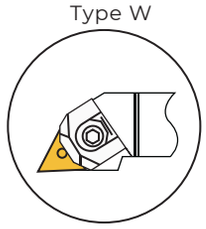

M型
Type M

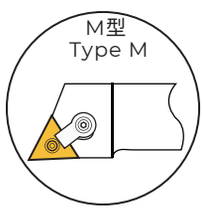

型号 Order Number		尺寸 Size (mm)					刀片 I nse rt	刀垫 Shi m	杠销 Lock Pin	扳手 Wrench	压板 Cla m p	双头螺栓 S cre w	扳手 Wrench
左刀/ Le ft	右刀/Right	h	b	H	F	L							
MTJNL1616H16	MTJNR1616H16	16	16	16	20	100	TN:160408	MT1603	CTM513	L2	HL1813	ML0625	L3
MTJNL2020K16	MTJNR2020K16	20	20	20	25	125							
MTJNL2525M16	MTJNR2525M16	25	25	25	32	150							
MTJNL3225M16	MTJNR3225M16	32	25	32	32	170							
MTJNL2020K22	MTJNR2020K22	20	20	20	25	125	TN:220408	MT2204	CTM617	L2.5	HL1917	ML0830	L4
MTJNL2525M22	MTJNR2525M22	25	25	25	32	150							
MTJNL3225P22	MTJNR3225P22	32	25	32	32	170							
MTJNL3232P22	MTJNR3232P22	32	32	32	40	170							

型号 Order Number	尺寸 Size (mm)						刀片 I nse rt	刀垫 Shi m	杠销 Lock pin	压板 Cla m p	压板螺钉 S cre w	扳手 Wrench	卡簧 Clip spring
	h	b	L	L1	H	f							
WTJNR/L1616H16	16	16	100	28	16	20	TN:1604	MT1603	CTM515-T	HLT-16	M5×25	L2.5 L4.0	“X” Tpye
WTJNR/L2020K16	20	20	125	28	20	25							
WTJNR/L2525M16	25	25	150	28	25	32							
WTJNR/L3232P16	32	32	170	28	32	40							

External Turning Tool Holder

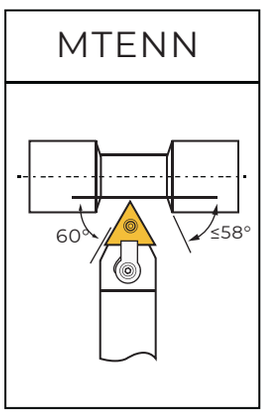

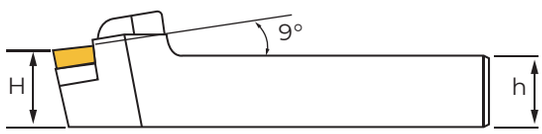

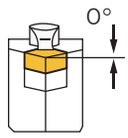

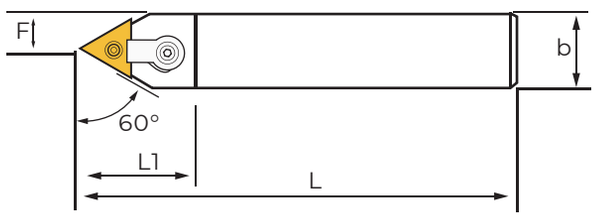

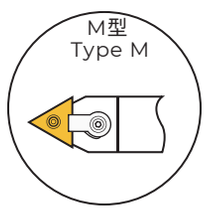

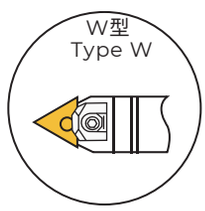

型号 Order Number	尺寸 Size (mm)					刀片 I nse rt	刀垫 Shi m	杠销 Lock Pin	扳手 Wrench	压板 Cla m p	双头螺栓 S cre w	扳手 Wrench
	h	b	H	F	L							
MTENN1616H16	16	16	16	8	100	TN:160408	MT1603	CTM513	L2	HL1813	ML0625	L3
MTENN2020K16	20	20	20	10	125							
MTENN2525M16	25	25	25	13	150							
MTENN2525M22	25	25	25	13	150	TN:220408	MT2204	CTM6178	L2.5	HL1917	ML0830	L4
MTENN3225P22	32	25	32	13	170							
MTENN3232P22	32	32	32	16	170							

型号 Order Number	尺寸 Size (mm)						刀片 I nse rt	刀垫 Shi m	刀垫螺钉 Serew	压板 Cla m p	压板螺钉 S cre w	扳手 Wrench	弹簧 S p ring
	h	b	L	L1	H	f						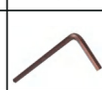	
WTENN2020K16	20	20	125	35	20	10	TN:1604	MT1603	CTM515-T	HLT-16	M5×25	L2.5 L4.0	“X” Tpye
WETNN2525M16	25	25	150	35	25	12.5							
WETNN3232P16	32	32	170	35	32	16							

External Turning Tool Holder

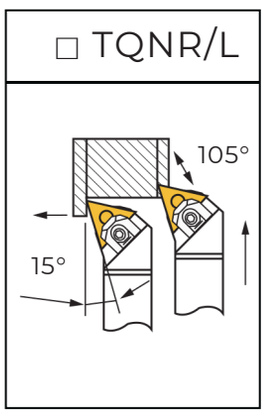

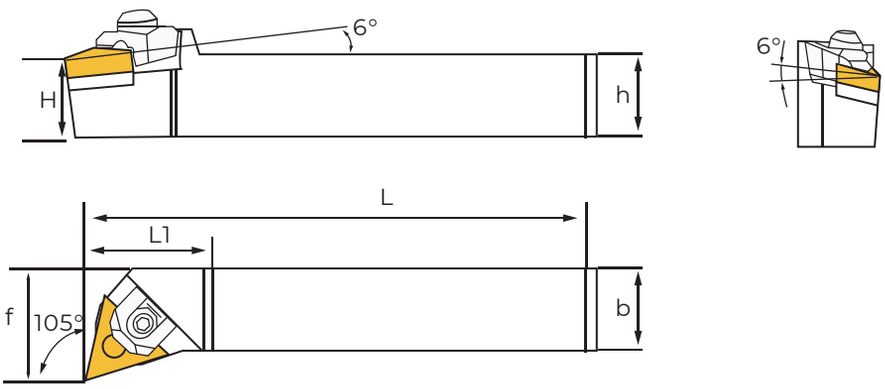

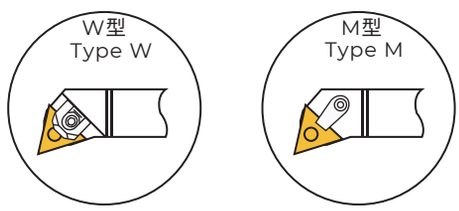

型号 Order Number	尺寸 Size (mm)						刀片 I nse rt	刀垫 Shi m	刀垫螺钉 Serew	压板 Cla m p	压板螺钉 S cre w	扳手 Wrench	弹簧 S p ring
	h	b	L	L1	H	f							
WTQNR/L2020K16	20	10	125	32	20	25	TN:1604	MT1603	CTM515-T	HLT-16	M5×25	L2.5 L4.0	“X” Tpye
WTQNR/L2525M16	25	25	150	32	25	32							
WTQNR/L3232P16	32	32	170	32	32	40							

型号 Order Number	尺寸 Size (mm)						刀片 I nse rt	刀垫 Shim	杠销 Lock Pin	扳手 Wrench	压板 Cla m p	双头螺栓 S cre w	扳手 Wrench
	h	b	L	L1	H	f							
MTQNR/L2020K16	20	20	125	26	20	25	TN:1604	MT1603	CTM513	L2	HL1813	ML0625	L3
MTQNR/L2525M16	25	25	150	26	25	32							
MTQNR/L3232P16	32	32	170	26	32	40							
MTQNR/L2525M22	25	25	150	32	25	32	TN:1604	MT2204	CTM617	L2.5	HL1917	ML0830	L4
MTQNR/L3232P22	32	32	170	32	32	40							

External Turning Tool Holder

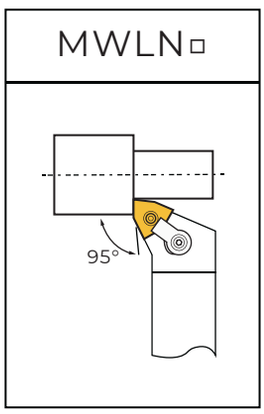

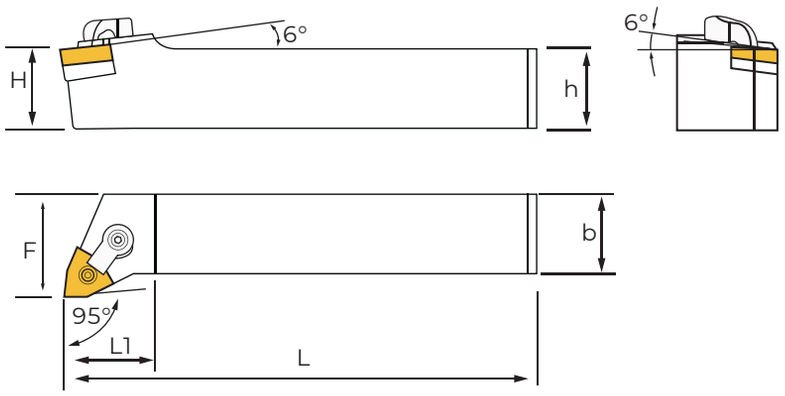

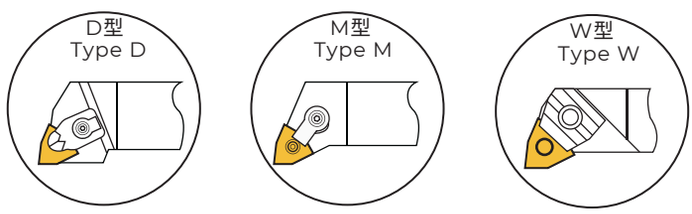

型号 Order Number		尺寸 Size (mm)					刀片 I nse rt	刀垫 Shi m	杠销 Lock Pin	扳手 Wrench	压板 Cla m p	双头螺栓 S cre w	扳手 Wrench
左刀/ Le ft	右刀/Right	h	b	H	F	L							
MWLNL1616H06	MWLNR1616H06	16	16	16	20	100	WN:060408	MW0603	CTM513	L2	HL1813	ML0625	L3
MWLNL2020K06	MWLNR2020K06	20	20	20	25	125							
MWLNL2525M06	MWLNR2525M06	25	25	25	32	150							
MWLNL2020K08	MWLNR2020K08	20	20	20	25	125	WN:080408	MW0804	CTM617	L2.5	HL1813	ML0625	L3
MWLNL2525M08	MWLNR2525M08	25	25	25	32	150							
MWLNL3232P08	MWLNR3232P08	32	32	32	40	170							
MWLNL4040R08	MWLNR4040R08	40	40	40	50	200							

型号 Order Number	尺寸 Size (mm)						刀片 I nse rt	刀垫 Shi m	刀垫螺钉 Serew	压板 Cla m p	压板螺钉 S cre w	扳手 Wrench	弹簧 S p ring
	h	b	L	L1	H	f							
DWLNR/L2020K08	20	20	125	32	20	25	WN:0804	MW0804	M6×10	D5260	DM5×21	L3.0	GB98-7
DWLNR/L2525M08	25	25	150	32	25	32							
DWLNR/L3232P08	32	32	170	32	32	40							

型号 Order Number	尺寸 Size (mm)						刀片 I nse rt	刀垫 Shi m	刀垫螺钉 Serew	压板 Cla m p	压板螺钉 S cre w	扳手 Wrench	弹簧 S p ring
	h	b	L	L1	H	f							
WWLNR/L2020K08	20	20	125	32	20	25	WN:0804	MW0804	CTM618-W	HLW-08	M5×25	L2.5 L4.0	"X" Tpye
WWLNR/L2525M08	25	25	150	32	25	32							
WWLNR/L3232P08	32	32	170	32	32	40							

External Turning Tool Holder

MVQN□

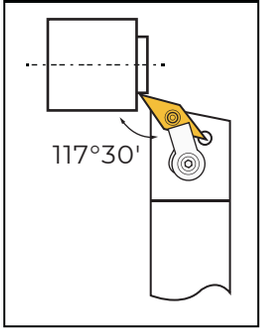

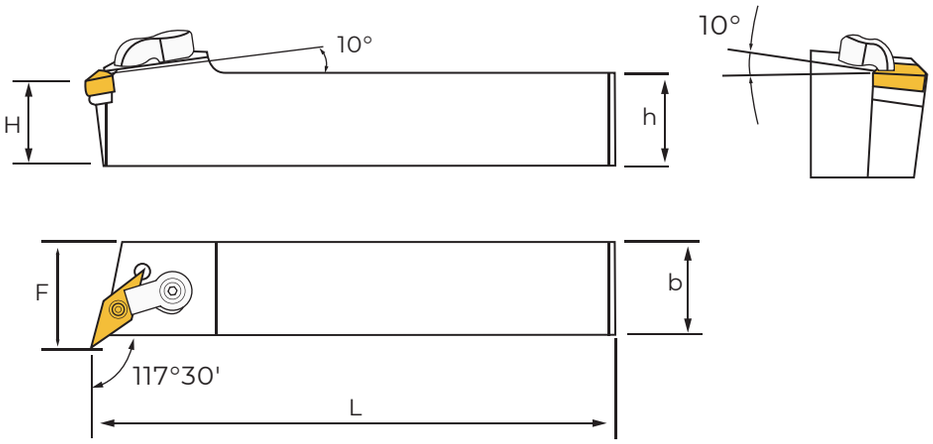

型号 Order Number		尺寸 Size (mm)					刀片 I nse rt	刀垫 Shi m	杠销 Lock Pin	扳手 Wrench	压板 Cla m p	双头螺栓 S cre w	扳手 Wrench
左刀/ Le ft	右刀/Right	h	b	H	F	L							
MVQNL2525M16	MVQNR2525M16	25	25	25	32	150	VN:160408	MV1603	CTM513	L2.0	HL2113	ML0625	L3
MVQNL3225P16	MVQNR3225P16	32	25	32	32	170							
MVQNL3232P16	MVQNR3232P16	32	32	32	40	170							
MVQNL4040R16	MVQNR4040R16	40	40	40	50	200							

MVJN□

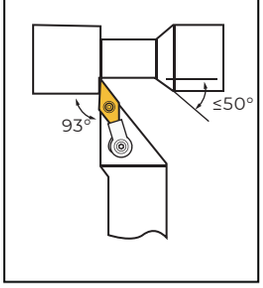

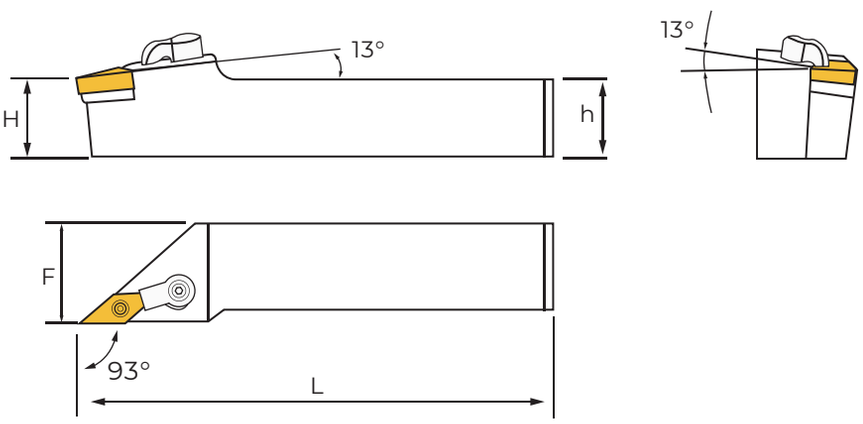

型号 Order Number		尺寸 Size (mm)					刀片 I nse rt	刀垫 Shi m	杠销 Lock Pin	扳手 Wrench	压板 Cla m p	双头螺栓 S cre w	扳手 Wrench
左刀/ Le ft	右刀/Right	h	b	H	F	L							
MVJNL1616K16	MVJNR1616K16	16	16	16	20	125	VN:160408	MV1603	CTM513	L2.0	HL2413	ML0625	L3
MVJNL2020K16	MVJNR2020K16	20	20	20	25	125							
MVJNL2525M16	MVJNR2525M16	25	25	25	32	150							
MVJNL3225P16	MVJNR3225P16	32	25	32	32	170							
MVJNL3232P16	MVJNR3232P16	32	32	32	40	170							
MVJNL4040R16	MVJNR4040R16	40	40	40	50	200							

External Turning Tool Holder

MVVNN

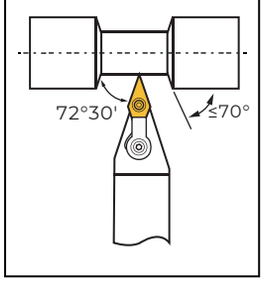

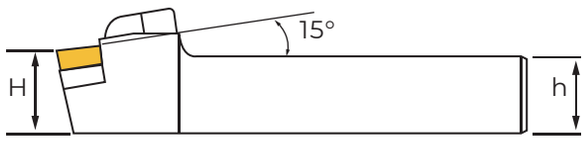

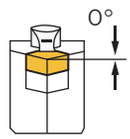

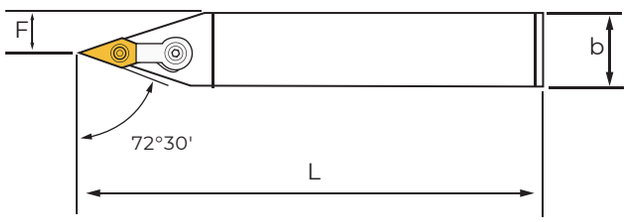

型号 Order Number	尺寸 Size (mm)					刀片 I nse rt	刀垫 Shim	杠销 Lock Pin	扳手 Wrench	压板 Cla m p	双头螺栓 S cre w	扳手 Wrench
	h	b	H	F	L							
MVVNN2020K16	20	20	20	10	125	VN:160408	MV1603	CTM513	L2	HL2413	ML0625	L3
MVVNN2525M16	25	25	25	13	150							
MVVNN3225P16	32	25	32	13	170							
MVVNN3232P16	32	32	32	16	170							
MVVNN4040R16	40	40	40	20	200							

MVUN□

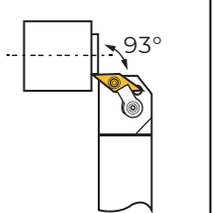

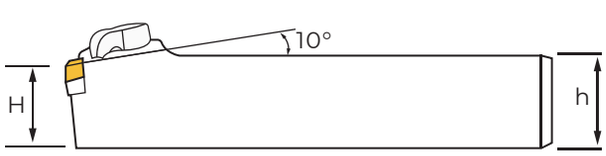

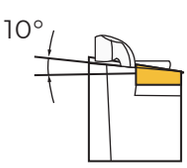

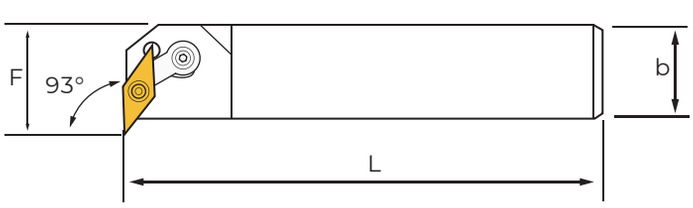

型号 Order Number		尺寸 Size (mm)					刀片 I nse rt	刀垫 Shim	杠销 Lock Pin	扳手 Wrench	压板 Cla m p	双头螺栓 S cre w	扳手 Wrench
左刀/ Le ft	右刀/Right	h	b	H	F	L							
MVUNL2525M16	MVUNR2525M16	25	25	25	32	150	VN:160408	MV1603	CTM513	L2	HL2113	ML0625	L3
MVUNL3225P16	MVUNR3225P16	32	25	32	32	170							
MVUNL3232P16	MVUNR3232P16	32	32	32	40	170							
MVUNL4040R16	MVUNR4040R16	40	40	40	50	200							

External Turning Tool Holder

SCBC□

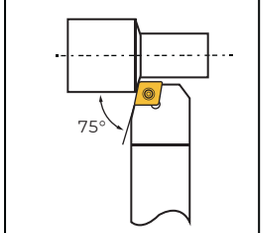

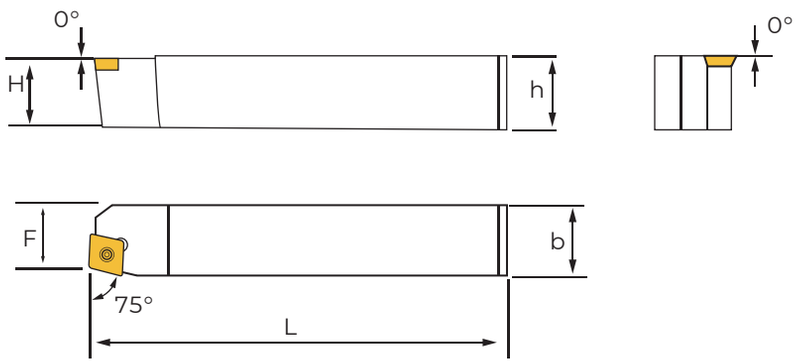

型号 Order Number		尺寸 Size (mm)					刀片 I nse rt	螺钉 S cre w	扳手 Wrench
左刀/ Le ft	右刀/Right	h	b	H	F	L			
S CBCL0808D06	SCBCR0808D06	8	8	8	7	60	CC:060204	M2.5×6	T8
S CBCL1010E 06	SCBCR1010E06	10	10	10	9	70			
S CBCL1212F06	SCBCR1212F06	12	12	12	11	80			
S CBCL1616H06	SCBCR1616H06	16	16	16	13	100			
S CBCL2020K06	SCBCR2020K06	20	20	20	17	125			
S CBCL2525M06	SCBCR2525M06	25	25	25	22	150			
S CBCL1212F09	SCBCR1212F09	12	12	12	11	80	CC:09T308	M4×10	T15
S CBCL1616H09	SCBCR1616H09	16	16	16	13	100			
S CBCL2020K09	SCBCR2020K09	20	20	20	17	125			
S CBCL2525M09	SCBCR2525M09	25	25	25	22	150			
S CBCL2020K12	SCBCR2020K12	20	20	20	17	125	CC:120408	M5×12	T20
S CBCL2525M12	SCBCR2525M12	25	25	25	22	150			

External Turning Tool Holder

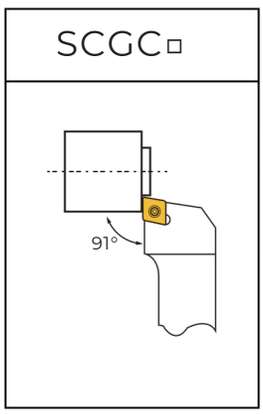

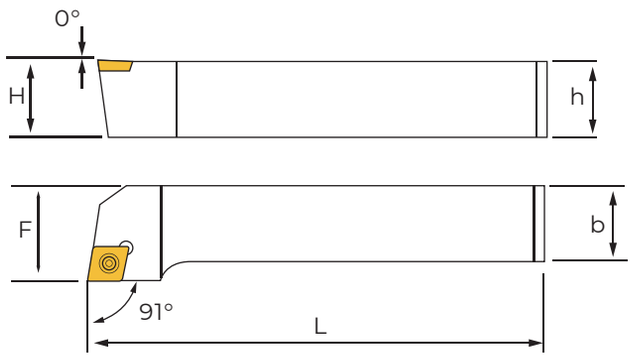

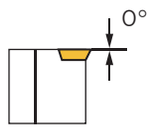

型号 Order Number		尺寸 Size (mm)					刀片 I nse rt	螺钉 S cre w	扳手 Wrench
左刀/ Le ft	右刀/Right	h	b	H	F	L			
S CGCL0808D06	SCGCR0808D06	8	8	8	10	60	CC:060204	M2.5×6	T8
S CGCL1010E 06	SCGCR1010E06	10	10	10	12	70			
S CGCL1212F06	SCGCR1212F06	12	12	12	16	80			
S CGCL1616H06	SCGCR1616H06	16	16	16	20	100			
S CGCL2020K06	SCGCR2020K06	20	20	20	25	125			
S CGCL1212F09	SCGCR1212F09	12	12	12	16	80			
S CGCL1616H09	SCGCR1616H09	16	16	16	20	100	CC:09T308	M4×10	T15
S CGCL2020K09	SCGCR2020K09	20	20	20	25	125			
S CGCL2525M09	SCGCR2525M09	25	25	25	32	150			
S CGCL2525M12	SCGCR2525M12	25	25	25	32	150	CC:120408	M5×12	T20

External Turning Tool Holder

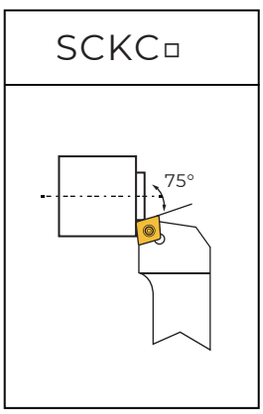

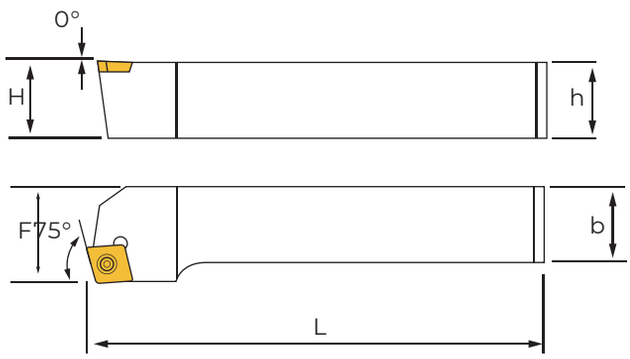

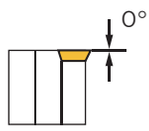

型号 Order Number		尺寸 Size (mm)					刀片 I nse rt	螺钉 S cre w	扳手 Wrench
左刀/ Le ft	右刀/Right	h	b	H	F	L			
S CKCL1010E 06	SCKCR1010E06	10	10	10	12	70	CC:060204	M2.5×6	T8
S CKCL1212F06	SCKCR1212F06	12	12	12	16	80			
S CKCL1616H06	SCKCR1616H06	16	16	16	20	100			
S CKCL2020K06	SCKCR2020K06	20	20	20	25	125			
S CKCL1616H09	SCKCR1616H09	16	16	16	20	100	CC:09T308	M4×10	T15
S CKCL2020K09	SCKCR2020K09	20	20	20	25	125			
S CKCL2525M09	SCKCR2525M09	25	25	25	32	150			

External Turning Tool Holder

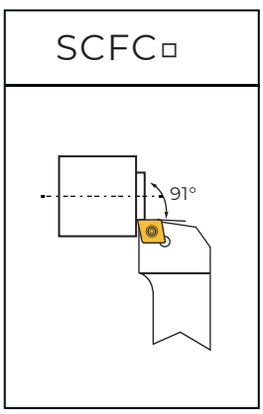

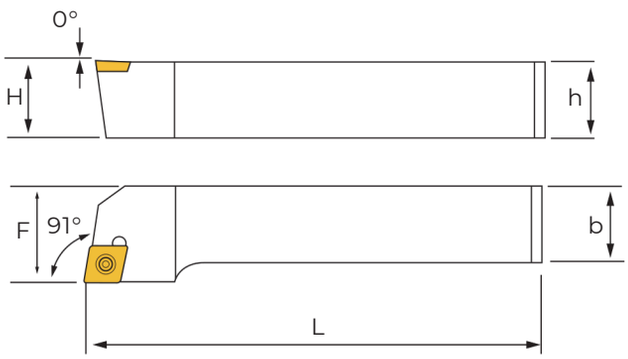

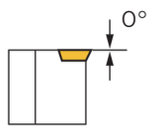

型号 Order Number		尺寸 Size (mm)					刀片 I nse rt	螺钉 S cre w	扳手 Wrench
左刀/ Le ft	右刀/Right	h	b	H	F	L			
S CFCL0808D06	SCFCR0808D06	8	8	8	10	60	CC:060204	M2.5×6	T8
S CFCL1010E 06	SCFCR1010E06	10	10	10	12	70			
S CFCL1212F06	SCFCR1212F06	12	12	12	16	80			
S CFCL1616H06	SCFCR1616H06	16	16	16	20	100			
S CFCL2020K06	SCFCR2020K06	20	20	20	25	125			
S CFCL1212F09	SCFCR1212F09	12	12	12	16	80	CC:09T308	M4×10	T15
S CFCL1616H09	SCFCR1616H09	16	16	16	20	100			
S CFCL2020K09	SCFCR2020K09	20	20	20	20	125			
S CFCL2525M09	SCFCR2525M09	25	25	25	32	150			
S CFCL2525M12	SCFCR2525M12	25	25	25	32	150	CC:120408	M5×12	T20

External Turning Tool Holder

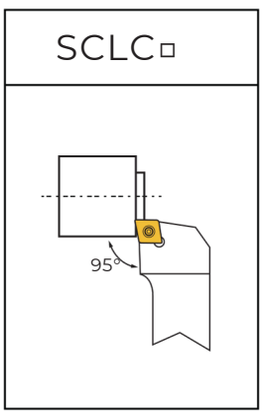

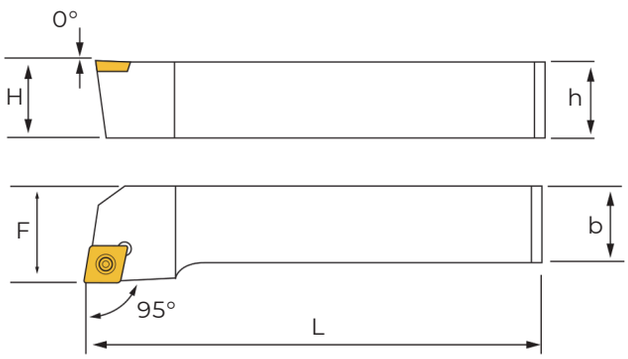

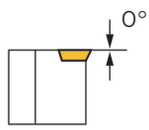

型号 Order Number		尺寸 Size (mm)					刀片 I nse rt	螺钉 S cre w	扳手 Wrench
左刀/ Le ft	右刀/Right	h	b	H	F	L			
S CLCL0808D06	SCLCR0808D06	8	8	8	10	60	CC:060204	M2.5×6	T8
S CLCL1010E 06	SCLCR1010E06	10	10	10	12	70			
S CLCL1212F06	SCLCR1212F06	12	12	12	16	80			
S CLCL1616H06	SCLCR1616H06	16	16	16	20	100			
S CLCL1212F09	SCLCR1212F09	12	12	12	16	80	CC:09T308	M4×10	T15
S CLCL1616H09	SCLCR1616H09	16	16	16	20	100			
S CLCL2020K09	SCLCR2020K09	20	20	20	25	125			
S CLCL2525M09	SCLCR2525M09	25	25	25	32	150			
S CLCL2020K12	SCLCR2020K12	20	20	20	25	125	CC:120408	M5×12	T20
S CLCL2525M12	SCLCR2525M12	25	25	25	32	150			

External Turning Tool Holder

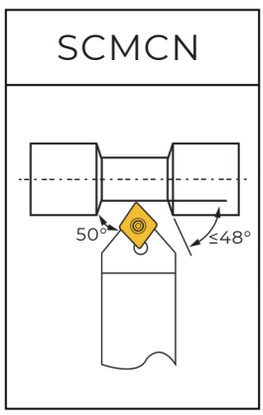

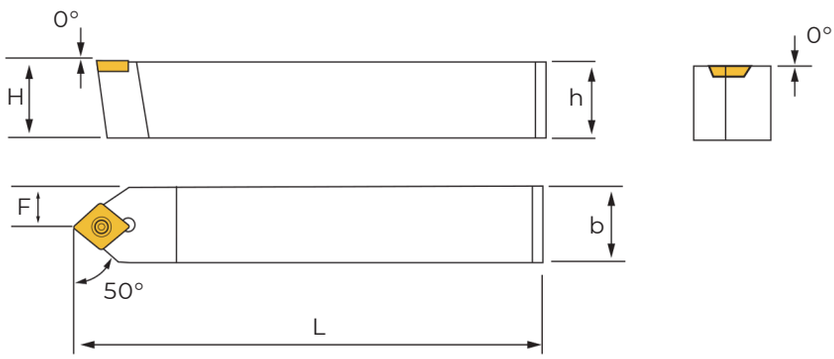

型号 Order Number	尺寸 Size (mm)					刀片 I nse rt	螺钉 S cre w	扳手 Wrench
	h	b	H	F	L			
S CMCN1010E 06	10	10	10	5	70	CC:060204	M2.5×6	T8
S CMCN1212F06	12	12	12	6	80			
SCMCN1616H06	16	16	16	8	100			
S CMCN2020K06	20	20	20	10	125			
S CMCN1212F09	12	12	12	6	80	CC:09T308	M4×10	T15
SCMCN1616H09	16	16	16	8	100			
S CMCN2020K09	20	20	20	10	125			
S CMCN2525M09	25	25	25	25	150			

External Turning Tool Holder

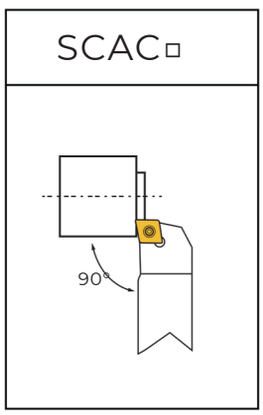

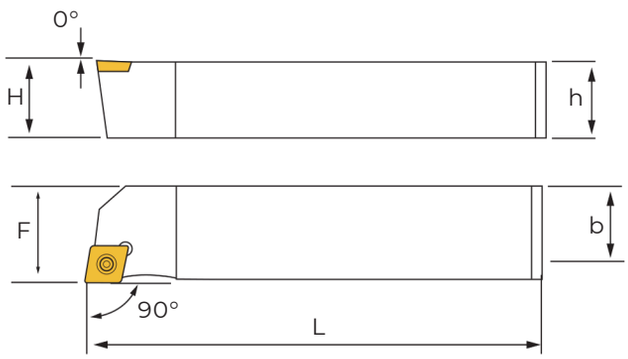

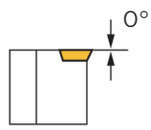

型号 Order Number		尺寸 Size (mm)					刀片 I nse rt	螺钉 S cre w	扳手 Wrench
左刀/ Le ft	右刀/Right	h	b	H	F	L			
S CA CL0808K06	SCACR0808K06	8	8	8	8	125	CC:060204	M2.5×6	T8
S CA CL1010K06	SCACR1010K06	10	10	10	10	125			
S CA CL1212K06	SCACR1212K06	12	12	12	12	125			
S CA CL1616K06	SCACR1616K06	16	16	16	16	125			
S CA CL2020K06	SCACR2020K06	20	20	20	20	125			
S CA CL1212K09	SCACR1212K09	12	12	12	12	125	CC:09T308	M4×10	T15
S CA CL1616K09	SCACR1616K09	16	16	16	16	125			
S CA CL2020K09	SCACR2020K09	20	20	20	20	125			
S CA CL2020K12	SCACR2020K12	20	20	20	20	200	CC:120408	M5×12	T20

External Turning Tool Holder

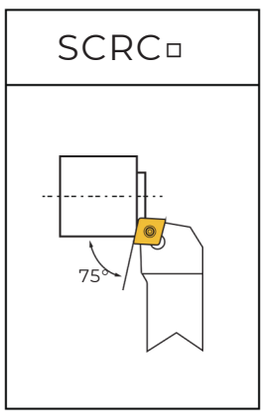

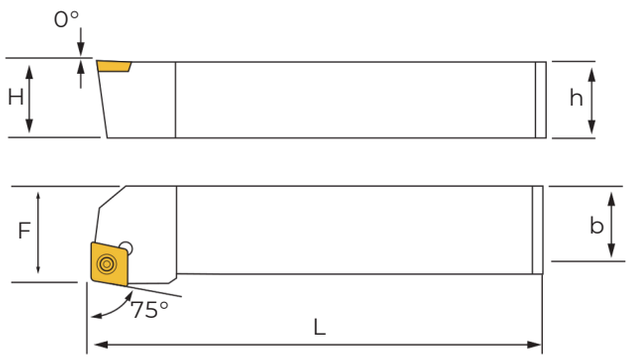

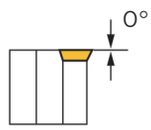

型号 Order Number		尺寸 Size (mm)					刀片 I nse rt	螺钉 S cre w	扳手 Wrench
左刀/ Le ft	右刀/Right	h	b	H	F	L			
S CR CL0808D06	SCRCR0808D06	8	8	8	9	60	CC:060204	M2.5×6	T8
S CR CL1010E 06	SCRCR1010E06	10	10	10	11	70			
S CR CL1212F06	SCRCR1212F06	12	12	12	13	80			
S CR CL1616H06	SCRCR1616H06	16	16	16	17	100			
S CR CL2020K06	SCRCR2020K06	20	20	20	22	125			
S CR CL1212F09	SCRCR1212F09	12	12	12	13	80	CC:09T308	M4×10	T15
S CR CL1616H09	SCRCR1616H09	16	16	16	17	100			
S CR CL2020K09	SCRCR2020K09	20	20	20	22	125			
S CR CL2525M09	SCRCR2525M09	25	25	25	27	150			
S CR CL2020K12	SCRCR2020K12	20	20	20	20	125	CC:120408	M5×12	T20
S CR CL2525M12	SCRCR2525M12	25	25	25	27	150			

External Turning Tool Holder

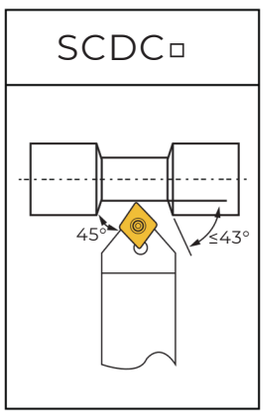

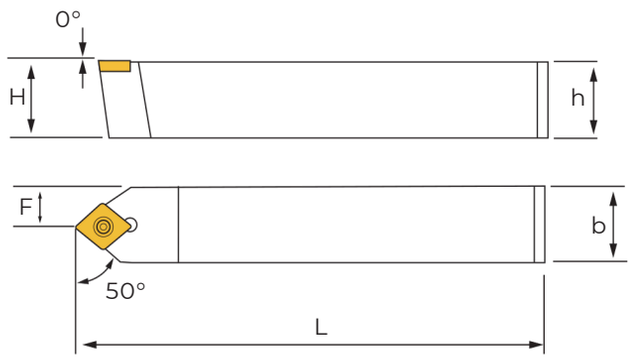

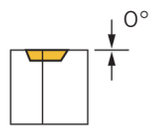

型号 Order Number		尺寸 Size (mm)					刀片 I nse rt	螺钉 S cre w	扳手 Wrench
左刀/ Le ft	右刀/Right	h	b	H	F	L			
S CDCL0808D06	SCDCR0808D06	8	8	8	4.2	60	CC:060204	M2.5×6	T8
S CDCL1010E 06	SCDCR1010E06	10	10	10	5.2	70			
S CDCL1212F06	SCDCR1212F06	12	12	12	6.2	80			
S CDCL1212F09	SCDCR1212F09	12	12	12	6.2	80	CC:09T308	M4×10	T15

External Turning Tool Holder

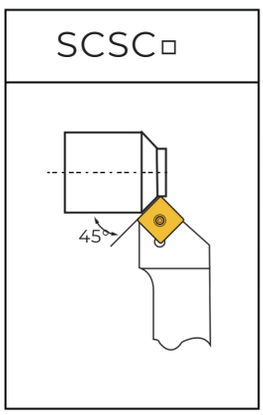

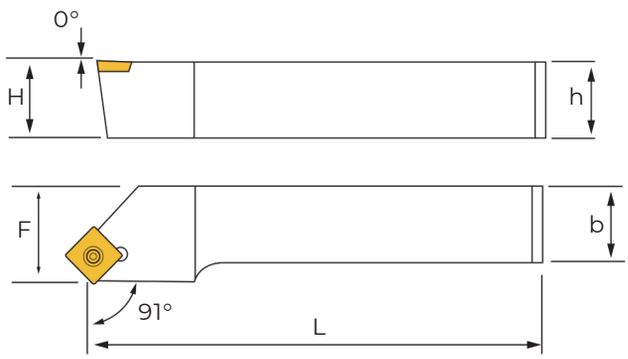

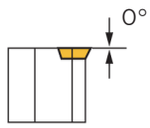

型号 Order Number		尺寸 Size (mm)					刀片 I nse rt	螺钉 S cre w	扳手 Wrench
左刀/ Le ft	右刀/Right	h	b	H	F	L			
S CS CL1010E 06	S CS CR1010E 06	10	10	10	12	70	CC:060204	M2.5×6	T8
S CS CL1212F06	S CS CR1212F06	12	12	12	16	80			
S CS CL1616H06	S CS CR1616H06	16	16	16	19	100			
S CS CL2020K06	S CS CR2020K06	20	20	20	25	125			
S CS CL1212F09	S CS CR1212F09	12	12	12	16	80	CC:09T308	M4×10	T15
S CS CL1616H09	S CS CR1616H09	16	16	16	20	100			
S CS CL2020K09	S CS CR2020K09	20	20	20	25	125			
S CS CL2525M09	S CS CR2525M09	25	25	25	31	150			
S CS CL1616H12	S CS CR1616H12	16	16	16	20	100	CC:120408	M5×12	T20
S CS CL2020K12	S CS CR2020K12	20	20	20	25	125			
S CS CL2525M12	S CS CR2525M12	25	25	25	32	150			

External Turning Tool Holder

SDAC□

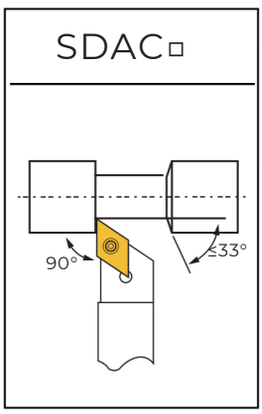

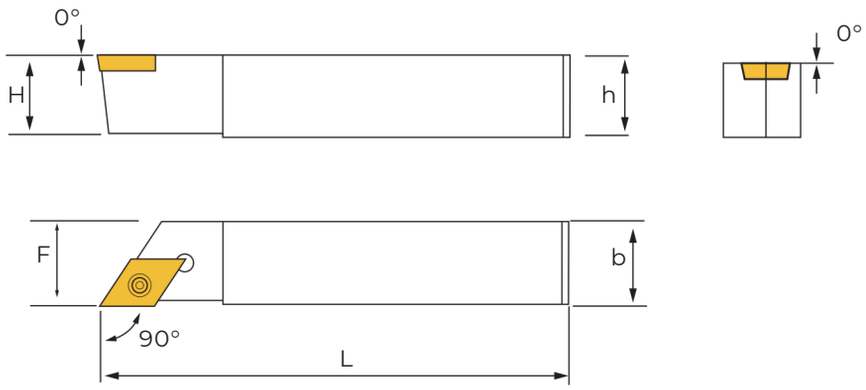

型号 Order Number		尺寸 Size (mm)					刀片 I nse rt	螺钉 S cre w	扳手 Wrench
左刀/ Le ft	右刀/Right	h	b	H	F	L			
S DA CL0808K07	SDACR0808K07	8	8	8	8	125	DC:070204	M2.5×8	T8
S DA CL1010K07	SDACR1010K07	10	10	10	10	125			
S DA CL1212K07	SDACR1212K07	12	12	12	12	125			
S DA CL1616K07	SDACR1616K07	16	16	16	16	125			
S DA CL1616K11	SDACR1616K11	16	16	16	16	125	DC:11T308	M4×10	T15

SDQC□

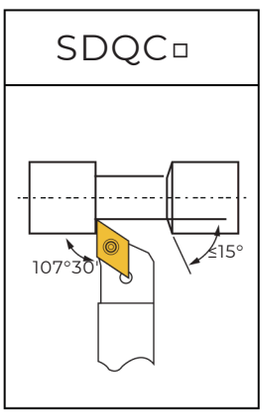

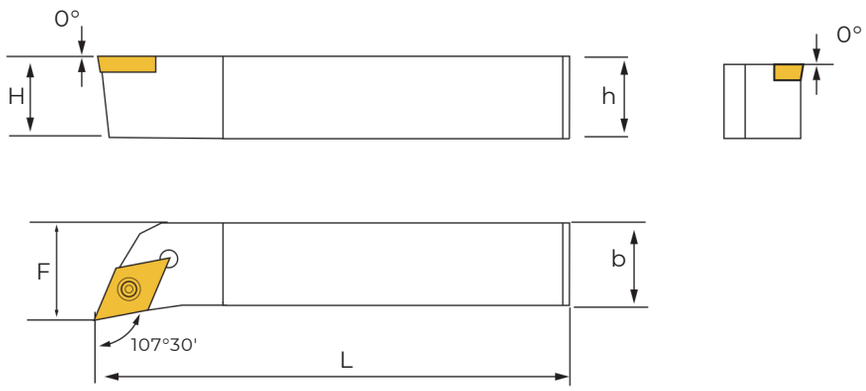

型号 Order Number		尺寸 Size (mm)					刀片 I nse rt	螺钉 S cre w	扳手 Wrench
左刀/ Le ft	右刀/Right	h	b	H	F	L			
S DQCL1010E 07	SDQCR1010E07	10	10	10	12	70	DC:070204	M2.5×8	T8
S DQCL1212F07	SDQCR1212F07	12	12	12	16	80			
S DQCL1616H07	SDQCR1616H07	16	16	16	20	100			
S DQCL2020K07	SDQCR2020K07	20	20	20	25	125			
S DQCL2525M07	SDQCR2525M07	25	25	25	32	150			
S DQCL1616H11	SDQCR1616H11	16	16	16	20	100	DC:11T308	M4×10	T15
S DQCL2020K11	SDQCR2020K11	20	20	20	25	125			
S DQCL2525M11	SDQCR2525M11	25	25	25	32	150			

外圆车刀杆

External Turning Tool Holder

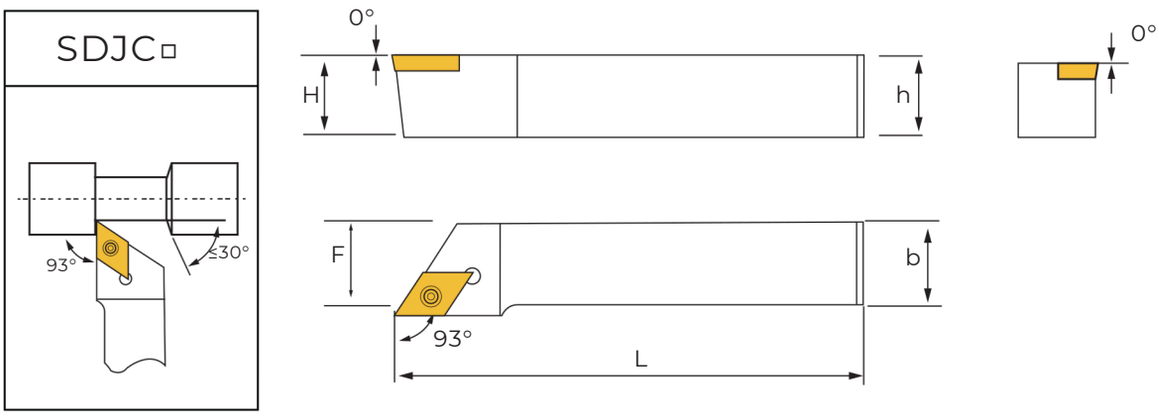

型号 Order Number		尺寸 Size (mm)					刀片 I nse rt	螺钉 S cre w	扳手 Wrench
左刀/ Le ft	右刀/Right	h	b	H	F	L			
S DJCL0808D07	SDJCR0808D07	8	8	8	10	60	DC:070204	M2.5×6	T8
S DJCL1010E 07	SDJCR1010E07	10	10	10	12	70			
S DJCL1212F07	SDJCR1212F07	12	12	12	16	80			
S DJCL1616H07	SDJCR1616H07	16	16	16	20	100			
S DJCL2020K07	SDJCR2020K07	20	20	20	25	125			
S DJCL2525M07	SDJCR2525M07	25	25	25	32	150			
S DJCL1212F11	SDJCR1212F11	12	12	12	16	80	DC:11T308	M4×10	T15
S DJCL1616H11	SDJCR1616H11	16	16	16	20	100			
S DJCL2020K11	SDJCR2020K11	20	20	20	25	125			
S DJCL2525M11	SDJCR2525M11	25	25	25	32	150			

External Turning Tool Holder

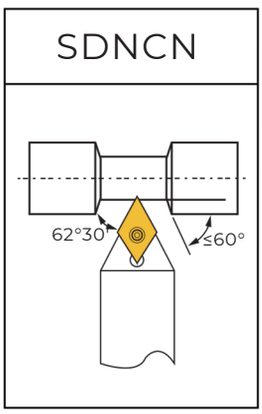

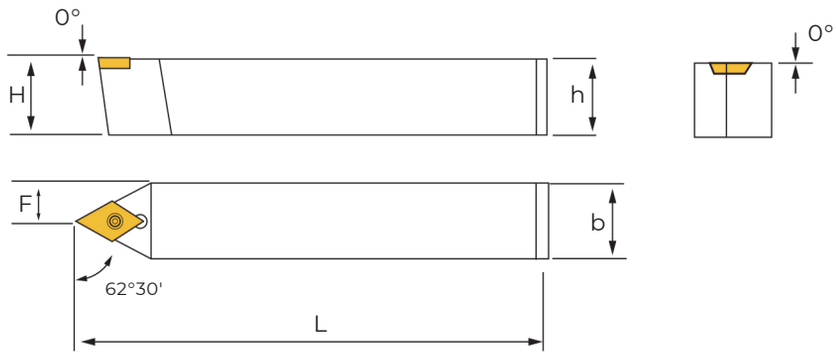

型号 Order Number	尺寸 Size (mm)					刀片 I nse rt	螺钉 S cre w	扳手 Wrench
	h	b	H	F	L			
S DNCN0808D07	8	8	8	4	60	DC:070204	M2.5×6	T8
S DNCN1010E 07	10	10	10	5	70			
S DNCN1212F07	12	12	12	6	80			
SDNCN1616H07	16	16	16	8	100			
S DNCN2020K07	20	20	20	10	125			
S DNCN2525M07	25	25	25	12.5	150			
S DNCN1212F11	12	12	12	6	80	DC:11T308	M4×10	T15
SDNCN1616H11	16	16	16	8	100			
S DNCN2020K11	20	20	20	10	125			
S DNCN2525M11	25	25	25	12.5	150			

External Turning Tool Holder

SDUC□

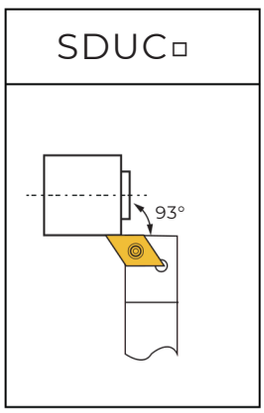

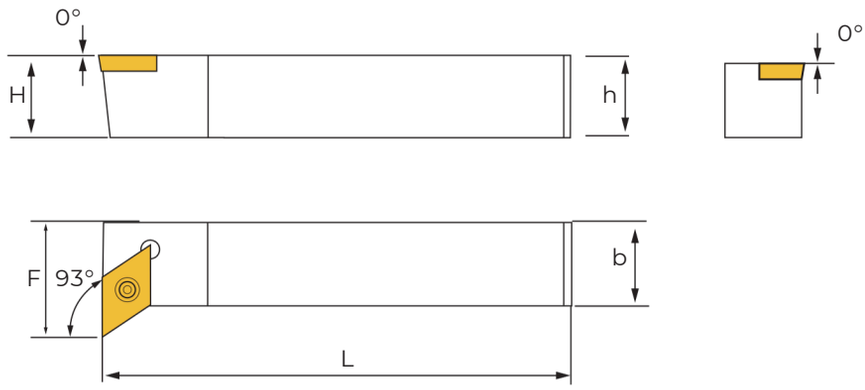

型号 Order Number		尺寸 Size (mm)					刀片 I nse rt	螺钉 S cre w	扳手 Wrench
左刀/ Le ft	右刀/Right	h	b	H	F	L			
S DUCL1212F07	SDUCR1212F07	12	12	12	16	80	DC:070204	M2.5×6	T8
S DUCL1616H07	SDUCR1616H07	16	16	16	20	100			
S DUCL1212F11	SDUCR1212F11	12	12	12	16	80	DC:11T308	M4×10	T15
S DUCL1616H11	SDUCR1616H11	16	16	16	20	100			

SSBC□

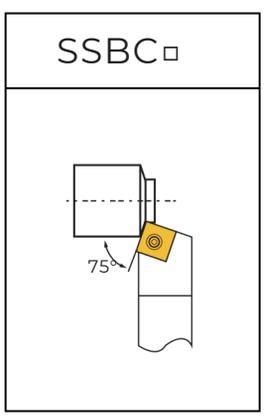

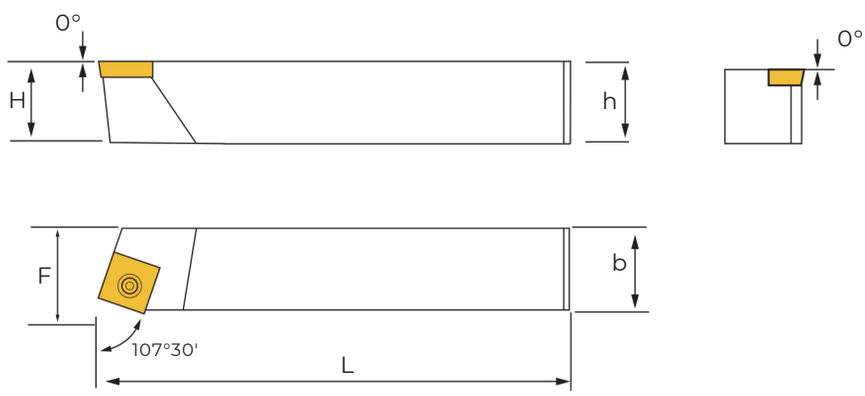

型号 Order Number		尺寸 Size (mm)					刀片 I nse rt	螺钉 S cre w	扳手 Wrench
左刀/ Le ft	右刀/Right	h	b	H	F	L			
S S BCL1212F09	SSBCR1212F09	12	12	12	11	80	SC:09T308	M4×10	T15
S S BCL1616H09	SSBCR1616H09	16	16	16	13	100			
S S BCL2020K09	SSBCR2020K09	20	20	20	17	125			
S S BCL2525M09	SSBCR2525M09	25	25	25	22	150			
S S BCL2020K12	SSBCR2020K12	20	20	20	17	125	S C:120408	M5×12	T20
S S BCL2525M12	SSBCR2525M12	25	25	25	22	150			

External Turning Tool Holder

SSDCN

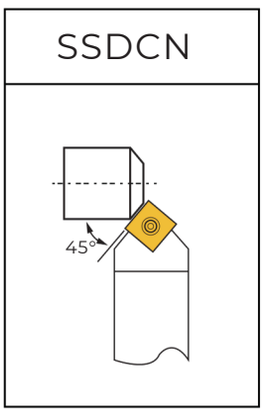

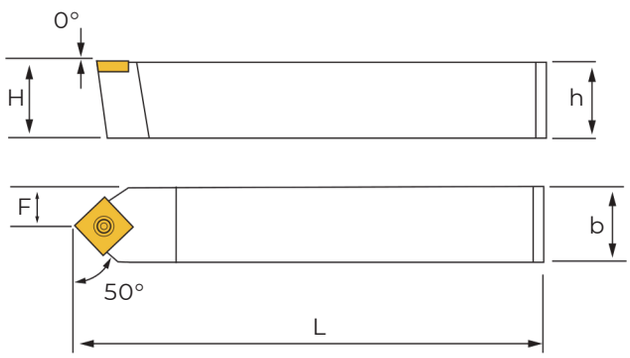

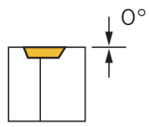

型号 Order Number	尺寸 Size (mm)					刀片 I nse rt	螺钉 S cre w	扳手 Wrench
	h	b	H	F	L			
S S DCN1212F09	12	12	12	6	80	SC:09T308	M4×10	T15
S S DCN1616H09	16	16	16	8	100			
S S DCN2020K09	20	20	20	10	125			
S S DCN2525M09	25	25	25	12.5	150			
S S DCN2020K12	20	20	20	10	125	S C:120408	M5×12	T20
S S DCN2525M12	25	25	25	12.5	150			

SSKC□

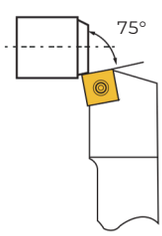

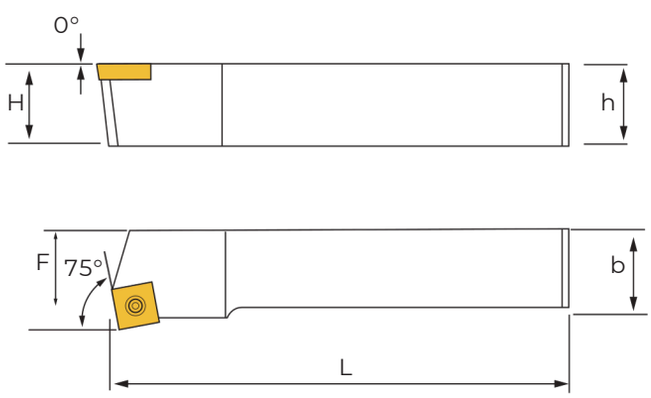

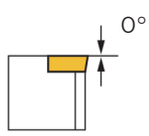

型号 Order Number		尺寸 Size (mm)					刀片 I nse rt	螺钉 S cre w	扳手 Wrench
左刀/ Le ft	右刀/Right	h	b	H	F	L			
S S KCL1212F09	SSKCR1212F09	12	12	12	16	80	SC:09T308	M4×8	T15
S S KCL1616H09	SSKCR1616H09	16	16	16	20	100			
S S KCL2020K09	SSKCR2020K09	20	20	20	25	125			
S S KCL2525M09	SSKCR2525M09	25	25	25	32	150			
S S KCL2020K12	SSKCR2020K12	20	20	20	25	125	S C:120408	M5×12	T20
S S KCL2525M12	SSKCR2525M12	25	25	25	32	150			

External Turning Tool Holder

SSSC□

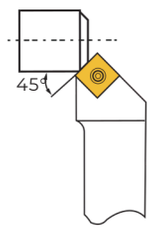

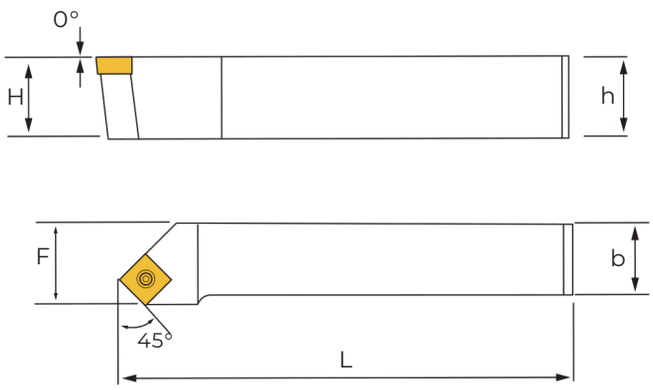

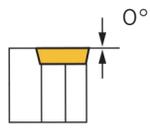

型号 Order Number		尺寸 Size (mm)					刀片 I nse rt	螺钉 S cre w	扳手 Wrench
左刀/ Le ft	右刀/Right	h	b	H	F	L			
SSSCL1212F09	SSSCR1212F09	12	12	12	16	80	SC:09T308	M4×10	T15
S S S CL1616H09	SSSCR1616H09	16	16	16	20	100			
S S S CL2020K09	SSSCR2020K09	20	20	20	25	125			
SSSCL3636M09	SSSCR3636M09	25	25	25	32	150			
S S S CL2020K12	SSSCR2020K12	20	20	20	25	125	S C:120408	M5×12	T20
SSSCL2525M12	SSSCR2525M12	25	25	25	32	150			

STAC□

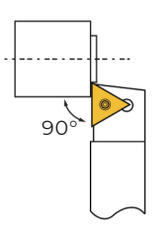

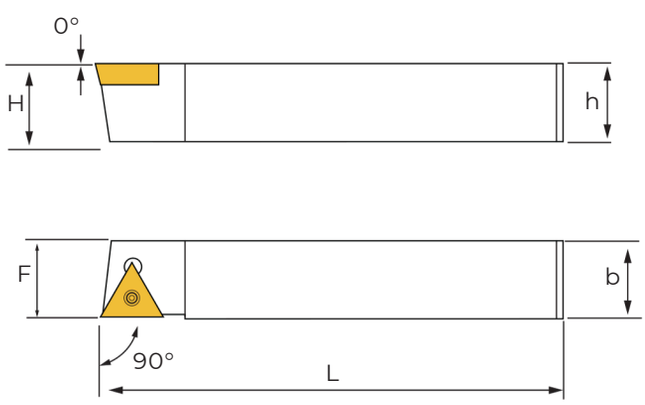

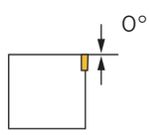

型号 Order Number		尺寸 Size (mm)					刀片 I nse rt	螺钉 S cre w	扳手 Wrench
左刀/ Le ft	右刀/Right	h	b	H	F	L			
S T A CL1616H11	STACR1616H11	16	16	16	16	100	TC:110204	M2.5×6	T07
S T A CL1616H16	STACR1616H16	16	16	16	16	100	TC:16T308	M4×10	T15
S T A CL2020K16	STACR2020K16	20	20	20	20	125	TC:16T308	M4×10	T15

External Turning Tool Holder

STDC□

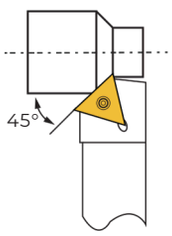

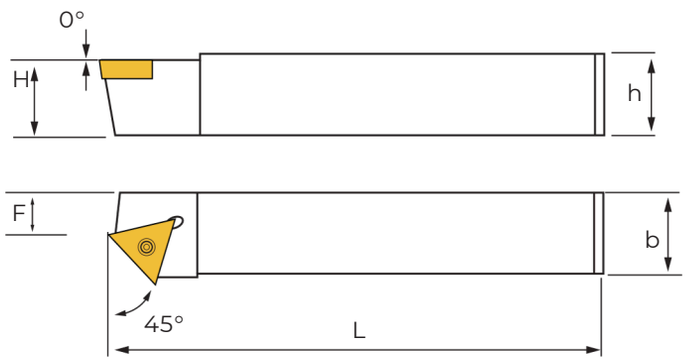

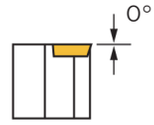

型号 Order Number		尺寸 Size (mm)					刀片 I nse rt	螺钉 S cre w	扳手 Wrench
左刀/ Le ft	右刀/Right	h	b	H	F	L			
S T DCL1010E 09	STDCR1010E09	10	10	10	5.3	70	TC:090204	M2.2×5	T07
S T DCL1212F11	STDCR1212F11	12	12	12	6.3	80	TC:110204	M2.5×6	T8
S T DCL1616H11	STDCR1616H11	16	16	16	9.9	100			
S T DCL2020K11	STDCR2020K11	20	20	20	12.1	125			
S T DCL1616H16	STDCR1616H16	16	16	16	9.9	100	TC:16T308	M4×10	T15
S T DCL2020K16	STDCR2020K16	20	20	20	12.1	125			
S T DCL2525M16	STDCR2525M16	25	25	25	17.2	150			

STDC□

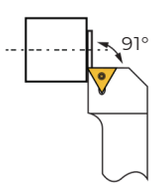

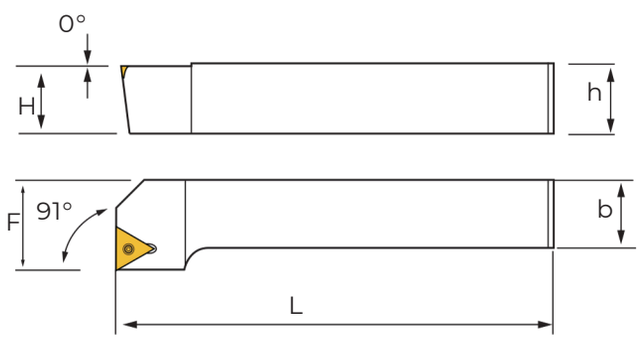

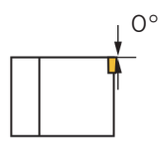

型号 Order Number		尺寸 Size (mm)					刀片 I nse rt	螺钉 S cre w	扳手 Wrench
左刀/ Le ft	右刀/Right	h	b	H	F	L			
STFCL1010E11	STFCR1010E11	10	10	10	12	70	TC:110204	M2.5×6	T8
S T FCL1212F11	S T FCR 1212F11	12	12	12	16	80			
S T FCL1616H11	S T FCR 1616H11	16	16	16	20	100			
S T FCL2020K11	S T FCR 2020K11	20	20	20	25	125			
STFCL2525M11	STFCR2525M11	25	25	25	32	150			
S T FCL1616H16	S T FCR 1616H16	16	16	16	20	100	TC:16T308	M4×10	T15
S T FCL2020K16	S T FCR 2020K16	20	20	20	25	125			
SFTCL2525M16	SFTCR2525M16	25	25	25	32	150			

External Turning Tool Holder

STGC□

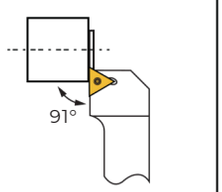

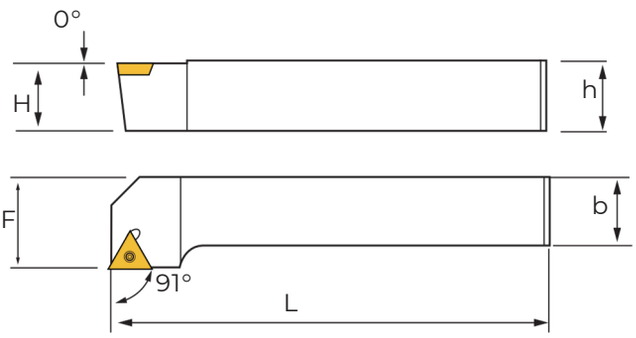

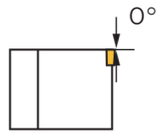

型号 Order Number		尺寸 Size (mm)					刀片 I nse rt	螺钉 S cre w	扳手 Wrench
左刀/ Le ft	右刀/Right	h	b	H	F	L			
S T GCL1616F11	S T GCR 1616F11	12	12	12	16	80	TC:110204	M2.5×6	T8
S T GCL1616H11	S T GCR 1616H11	16	16	16	20	100			
S T GCL2020K11	S T GCR 2020K11	20	20	20	25	125			
STGCL2525M11	STGCR2525M11	25	25	25	32	150			
S T GCL1616H16	S T GCR 1616H16	16	16	16	20	100	TC:16T308	M4×10	T15
S T GCL2020K16	S T GCR 2020K16	20	20	20	25	125			
STGCL2525M16	STGCR2525M16	25	25	25	32	150			

STJC□

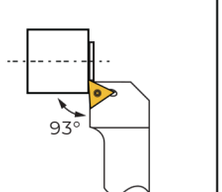

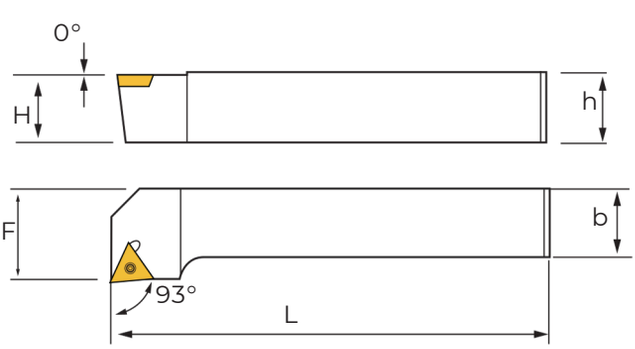

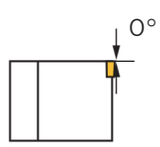

型号 Order Number		尺寸 Size (mm)					刀片 I nse rt	螺钉 S cre w	扳手 Wrench
左刀/ Le ft	右刀/Right	h	b	H	F	L			
S T JCL1212F11	S T JCR 1212F11	12	12	12	16	80	TC:110204	M2.5×6	T8
S T JCL1616H11	S T JCR 1616H11	16	16	16	20	100			
S T JCL2020K11	S T JCR 2020K11	20	20	20	25	125			
S T JCL1616H16	S T JCR 1616H16	16	16	16	20	100	TC:16T308	M4×10	T15
S T JCL2020K16	S T JCR 2020K16	20	20	20	25	125			
STJCL2525M16	STJCR2525M16	25	25	25	32	150			

External Turning Tool Holder

STTC□

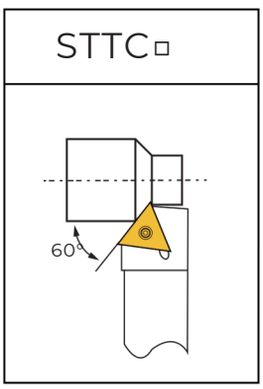

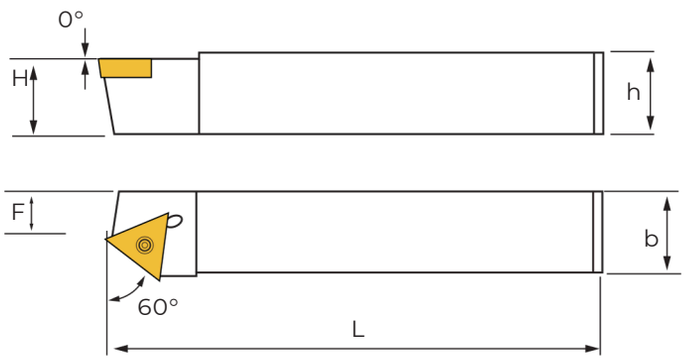

型号 Order Number		尺寸 Size (mm)					刀片 I nse rt	螺钉 Screw	扳手 Wrench
左刀/ Le ft	右刀/Right	h	b	H	F	L			
S T T CL1616H11	STTCR1616H11	16	16	16	13	100	TC:110204	M2.5×6	T8
S T T CL2020K11	STTCR2020K11	20	20	20	17	125			
S T T CL1616H16	STTCR1616H16	16	16	16	13	100	TC:16T308	M4×10	T15
S T T CL2020K16	STTCR2020K16	20	20	20	17	125			
STTCL2525M16	STTCR2525M16	25	25	25	22	150			

SVAC□

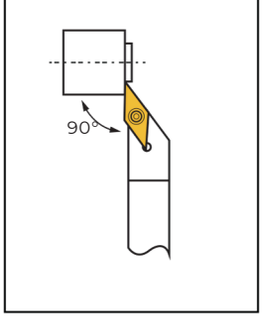

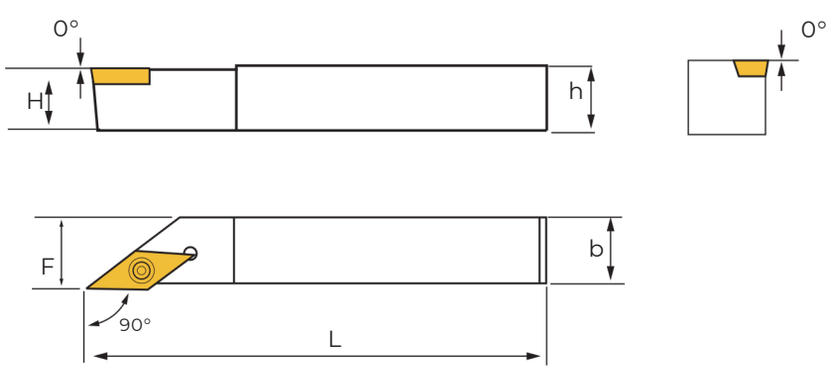

型号 Order Number		尺寸 Size (mm)					刀片 I nse rt	螺钉 S cre w	扳手 Wrench
左刀/ Le ft	右刀/Right	h	b	H	F	L			
S VA CL0808D11	SVACR0808D11	8	8	8	8	60	VC:110304	M2.5×6	T8
S VA CL1010E 11	SVACR1010E11	10	10	10	10	70			
S VA CL1212F11	SVACR1212F11	12	12	12	12	80			
S VA CL1616H11	SVACR1616H11	16	16	16	16	100			
S VA CL1616H16	SVACR1616H16	16	16	16	16	100	VC:160404	M4×10	T15

External Turning Tool Holder

SVQC□

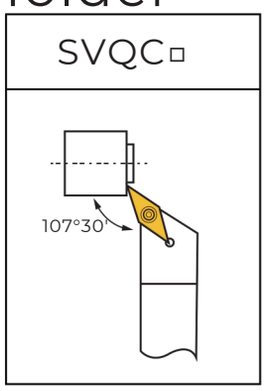

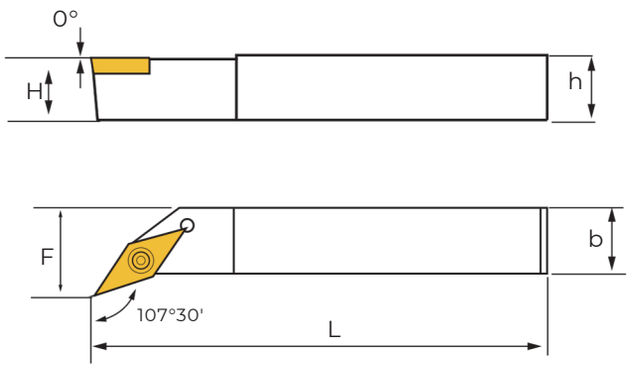

型号 Order Number		尺寸 Size (mm)					刀片 I nse rt	螺钉 S cre w	扳手 Wrench
左刀/ Le ft	右刀/Right	h	b	H	F	L			
S VQCL1212F11	SVQCR1212F11	12	12	12	16	80	VC:110304	M2.5×6	T8
S VQCL1616H11	SVQCR1616H11	16	16	16	20	100			
S VQCL2020K11	SVQCR2020K11	20	20	20	25	125			
S VQCL2525M11	SVQCR2525M11	25	25	25	32	150			
S VQCL2020K16	SVQCR2020K16	20	20	20	25	125	VC:160404	M4×10	T15
S VQCL2525M16	SVQCR2525M16	25	25	25	32	150			

SVJC□

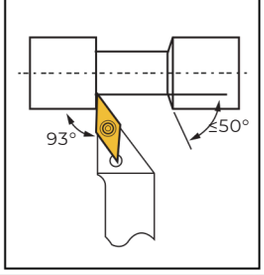

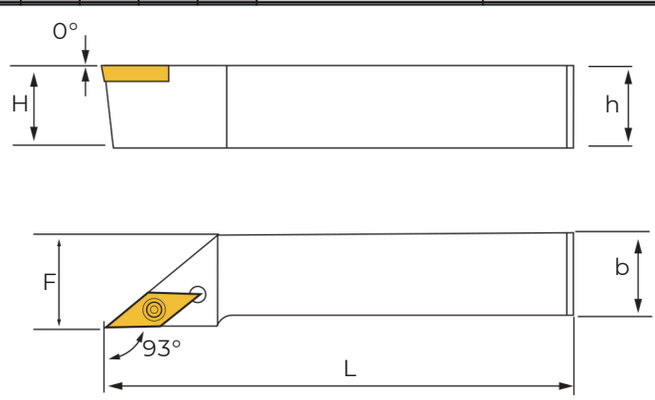

型号 Order Number		尺寸 Size (mm)					刀片 I nse rt	螺钉 S cre w	扳手 Wrench
左刀/ Le ft	右刀/Right	h	b	H	F	L			
S VJCL0808D11	SVJCR0808D11	8	8	8	10	60	VC:110304	M2.5×6	T8
S VJCL1010E 11	SVJCR1010E11	10	10	10	12	70			
S VJCL1212F11	SVJCR1212F11	12	12	12	16	80			
S VJCL1616H11	SVJCR1616H11	16	16	16	20	100			
S VJCL2020K11	SVJCR2020K11	20	20	20	25	125			
S VJCL2525M11	SVJCR2525M11	25	25	25	32	150			
S VJCL1212F16	SVJCR1212F16	12	12	12	16	80	VC:160404	M4×10	T15
S VJCL1616H16	SVJCR1616H16	16	16	16	20	100			
S VJCL2020K16	SVJCR2020K16	20	20	20	25	125			
S VJCL2525M16	SVJCR2525M16	25	25	25	32	150			

External Turning Tool Holder

SVUC□

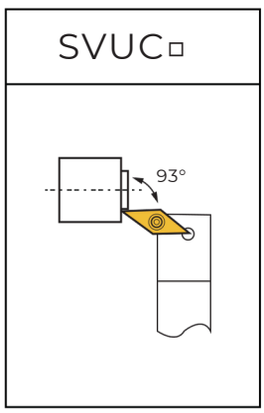

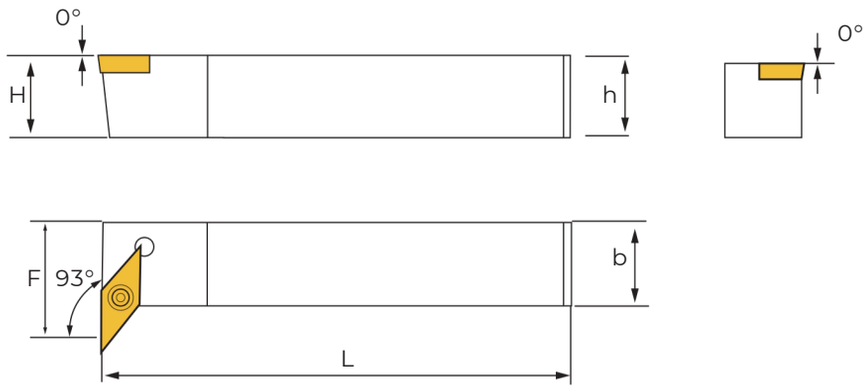

型号 Order Number		尺寸 Size (mm)					刀片 I nse rt	螺钉 S cre w	扳手 Wrench
左刀/ Le ft	右刀/Right	h	b	H	F	L			
S VUCL1212F11	SVUCR1212F11	12	12	12	16	80	VC:110304	M2.5×6	T8
SVUCL1616H11	SVUCR1616H11	16	16	16	20	100			
S VUCL2020K11	SVUCR2020K11	20	20	20	25	125			
SVUCL2525M16	SVUCR2525M16	25	25	25	32	150	VC:110304	M4×10	T15

SVVCN

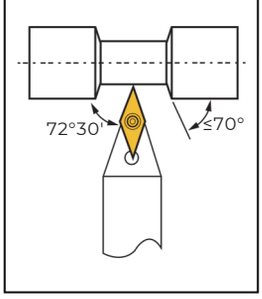

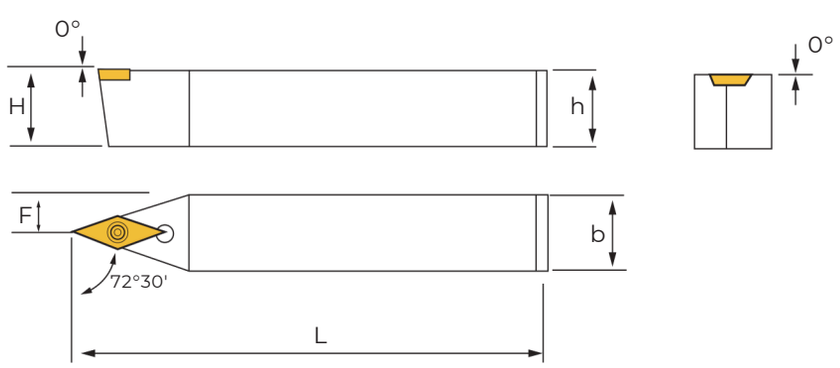

型号 Order Number	尺寸 Size (mm)					刀片 I nse rt	螺钉 S cre w	扳手 Wrench
	h	b	H	F	L			
S VVCN1212F11	12	12	12	6	80	VC:110304	M2.5×6	T8
S VVCN1616H11	16	16	16	8	100			
S VVCN2020K11	20	20	20	10	125			
S VVCN2525M11	25	25	25	12.5	150			
S VVCN2020K16	20	20	20	10	125	VC:160404	M4×10	T15
S VVCN2525M16	25	25	25	12.5	150			

External Turning Tool Holder

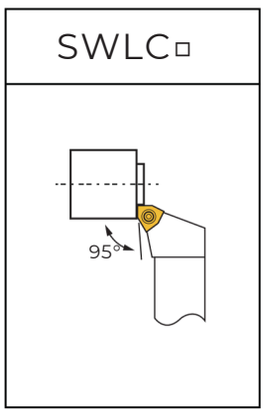

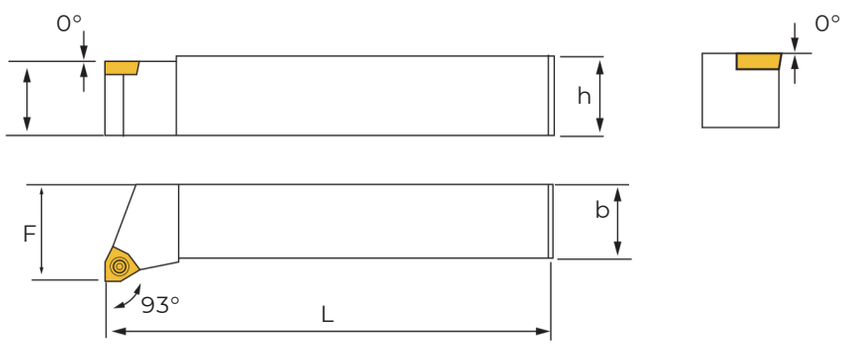

型号 Order Number		尺寸 Size (mm)					刀片 I nse rt	螺钉 S cre w	扳手 Wrench
左刀/ Le ft	右刀/Right	h	b	H	F	L			
S W LCL0808D04	SWLCR0808D04	8	8	8	10	60	WC:040204	M2.5×6	T8
SWLCL1010E04	SWLCR1010E04	10	10	10	12	70			
SWLCL1212F04	SWLCR1212F04	12	12	12	16	80			
S W LCL1616H04	SWLCR1616H04	16	16	16	20	100			
S W LCL2020K04	SWLCR2020K04	20	20	20	25	125			
SWLCL1212F06	SWLCR1212F06	12	12	12	16	80	WC:06T308	M4×10	T15
S W LCL1616H16	SWLCR1616H16	16	16	16	20	100			
S W LCL2020K06	SWLCR2020K06	20	20	20	25	125			
SWLCL2525M06	SWLCR2525M06	25	25	25	32	150			

External Turning Tool Holder

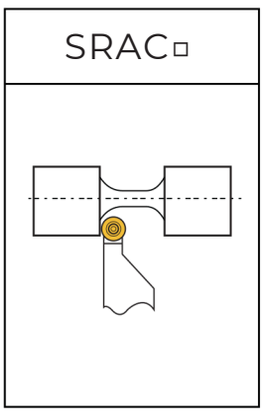

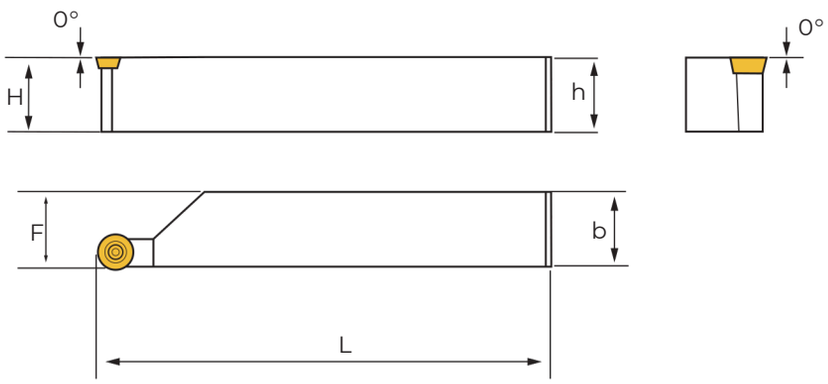

型号 Order Number		尺寸 Size (mm)					刀片 I nse rt	螺钉 S cre w	扳手 Wrench
左刀/ Le ft	右刀/Right	h	b	H	F	L			
SRACL1010E06	SRACR1010E06	10	10	10	10	70	R C:0602M0	M2.5×6	T8
SRACL1212F06	SRACR1212F06	12	12	12	12	80			
S R A CL1616H06	SRACR1616H06	16	16	16	16	100			
S R A CL2020K06	SRACR2020K06	20	20	20	20	125			
SRACL2525M06	SRACR2525M06	25	25	25	25	150			
S R A CL3225P06	SRACR3225P06	32	32	32	32	170			
S R A CL3232P06	SRACR3232P06	32	32	32	32	170			
SRACL1212F08	SRACR1212F08	12	12	12	12	80	R C:0803M0	M3×7.2	T15
S R A CL1616H08	SRACR1616H08	16	16	16	16	100			
S R A CL2020K08	SRACR2020K08	20	20	20	20	125			
S R A CL2525M08	SRACR2525M08	25	25	25	25	150			
S R A CL3225P08	SRACR3225P08	32	32	32	32	170			
SRACL2525M10	SRACR2525M10	25	25	25	25	150	R C:1003M0	M3.5×9	T15
S R A CL3232P10	SRACR3232P10	32	32	32	32	170			
SRACL2525M12	SRACR2525M12	25	25	25	25	150	R C:1204M0	M4×10	T15
S R A CL3232O12	SRACR3232O12	32	32	32	32	170			

External Turning Tool Holder

SRDCN

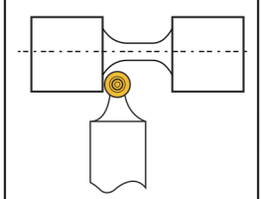

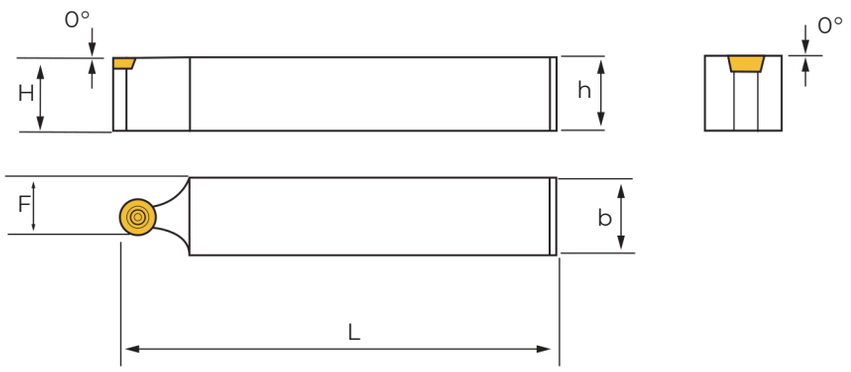

型号 Order Number	尺寸 Size (mm)					刀片 I nse rt	螺钉 S cre w	扳手 Wrench
	h	b	H	F	L			
S R DCN1010E 06	10	10	10	8	70	R C:0602M0	M2.5×6	T8
S R DCN1212F06	12	12	12	9	80			
S R DCN1616H06	16	16	16	11	100			
S R DCN2020K06	20	20	20	13	125			
S R DCN2525M06	25	25	25	15.5	150			
S R DCN1616H08	16	16	16	12	100	R C:0803M0	M3×7.2	T15
S R DCN2020K08	20	20	20	14	125			
S R DCN2525M08	25	25	25	16.5	150			
S R DCN1616H10	16	16	16	13	100	R C:1003M0	M3.5×9	T15
S R DCN2020K10	20	20	20	15	125			
S R DCN2525M10	25	25	25	17.5	150			
S R DCN3232P10	32	32	32	21	170			
S R DCN2525M12	25	25	25	18.5	150	RC:1204M0	M4×10	T15
S R DCN3225P12	32	32	32	20.5	170			

External Turning Tool Holder

SCAC□

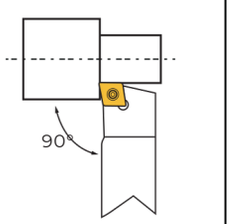

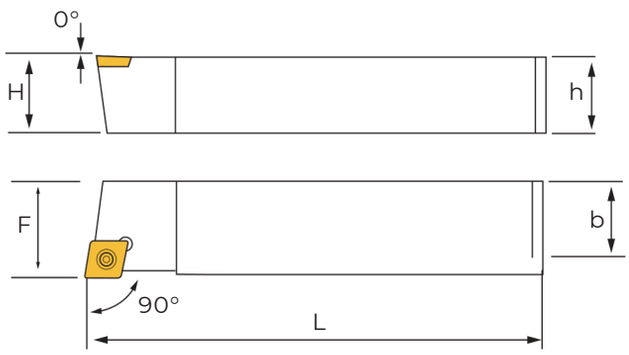

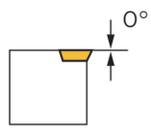

型号 Order Number		尺寸 Size (mm)					刀片 I nse rt	螺钉 S cre w	扳手 Wrench
左刀/ Le ft	右刀/Right	h	b	H	F	L			
SCACL0808K06-S	SCACR0808K06-S	8	8	8	8	125	CC:060204	M2.5×6	T8
SCACL1010K06-S	SCACR1010K06-S	10	10	10	10	125			
SCACL1212K06-S	SCACR1212K06-S	12	12	12	12	125			
SCACL1616K06-S	SCACR1616K06-S	16	16	16	16	125			
SCACL1212K09-S	SCACR1212K09-S	12	12	12	12	125	CC:09T308	M4×10	T15
SCACL1616K09-S	SCACR1616K09-S	16	16	16	16	125			

SCLC□

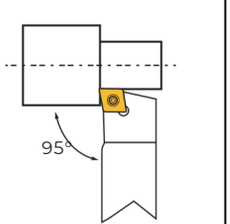

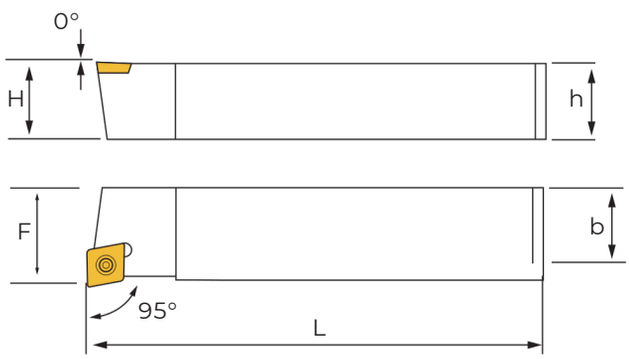

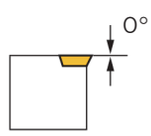

型号 Order Number		尺寸 Size (mm)					刀片 I nse rt	螺钉 S cre w	扳手 Wrench
左刀/ Le ft	右刀/Right	h	b	H	F	L			
S CLCL0808K06- S	SCLCR0808K06-S	8	8	8	8	125	CC:060204	M2.5×6	T8
S CLCL1010K06- S	SCLCR1010K06-S	10	10	10	10	125			
S CLCL1212K06- S	SCLCR1212K06-S	12	12	12	12	125			
S CLCL1616K06- S	SCLCR1616K06-S	16	16	16	16	125			
S CLCL1212K09- S	SCLCR1212K09-S	12	12	12	12	125	CC:09T308	M4×10	T15
S CLCL1616K09- S	SCLCR1616K09-S	16	16	16	16	125			

External Turning Tool Holder

SDAC□

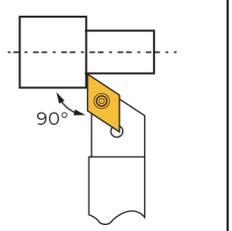

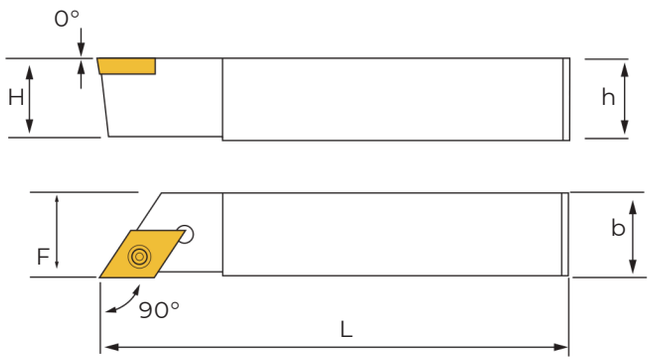

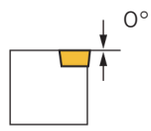

型号 Order Number		尺寸 Size (mm)					刀片 I nse rt	螺钉 S cre w	扳手 Wrench
左刀/ Le ft	右刀/Right	h	b	H	F	L			
SDACL0808K07-S	SDACR0808K07-S	8	8	8	8	125	DC:070204	M2.5×8	T8
SDACL1010K07-S	SDACR1010K07-S	10	10	10	10	125			
SDACL1212K07-S	SDACR1212K07-S	12	12	12	12	125			
SDACL1616K07-S	SDACR1616K07-S	16	16	16	16	125			
SDACL1212K11-S	SDACR1212K11-S	12	12	12	12	125	DC:11T308	M4×10	T15
SDACL1616K11-S	SDACR1616K11-S	16	16	16	16	125			

SCQC□

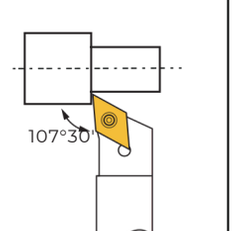

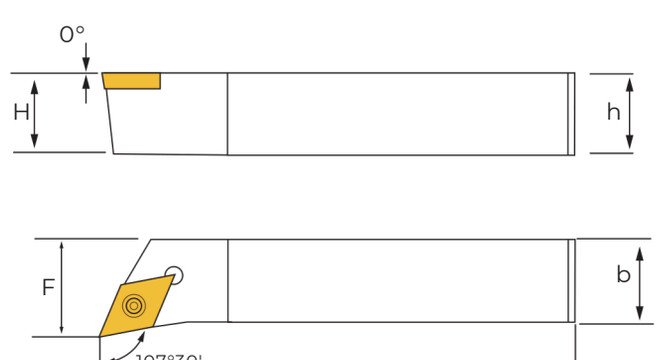

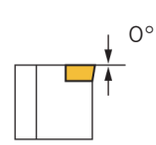

型号 Order Number		尺寸 Size (mm)					刀片 I nse rt	螺钉 S cre w	扳手 Wrench
左刀/ Le ft	右刀/Right	h	b	H	F	L			
SDQCL1010K07-S	SDQCR1010K07-S	10	10	10	12	125	DC:070204	M2.5×8	T8
SDQCL1212K07-S	SDQCR1212K07-S	12	12	12	16	125			
SDQCL1616K07-S	SDQCR1616K07-S	16	16	16	20	125			
SDQCL1616K11-S	SDQCR1616K11-S	16	16	16	20	125	DC:11T308	M4×10	T15

External Turning Tool Holder

SDJC□

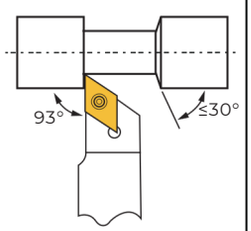

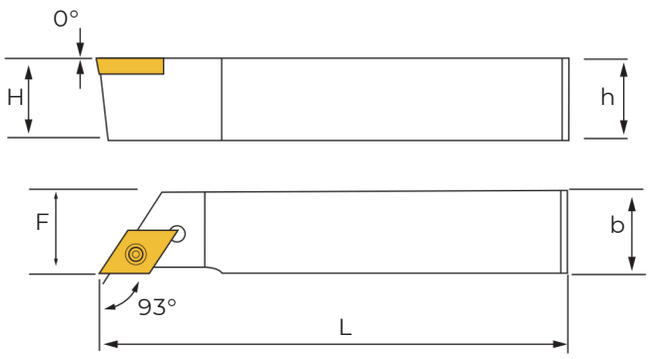

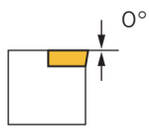

型号 Order Number		尺寸 Size (mm)					刀片 I nse rt	螺钉 S cre w	扳手 Wrench
左刀/ Le ft	右刀/Right	h	b	H	F	L			
S DJCL0808K07- S	SDJCR0808K07-S	8	8	8	8	125	DC:070204	M2.5×8	T8
S DJCL1010K07- S	SDJCR1010K07-S	10	10	10	10	125			
S DJCL1212K07- S	SDJCR1212K07-S	12	12	12	12	125			
S DJCL1616K07- S	SDJCR1616K07-S	16	16	16	16	125			
S DJCL1212K11- S	SDJCR1212K11-S	12	12	12	12	125	DC:11T308	M4×10	T15
S DJCL1616K11- S	SDJCR1616K11-S	16	16	16	16	125			

SDNCN

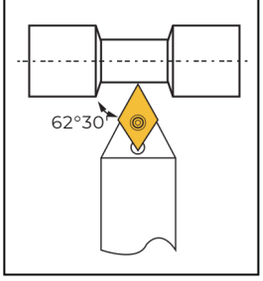

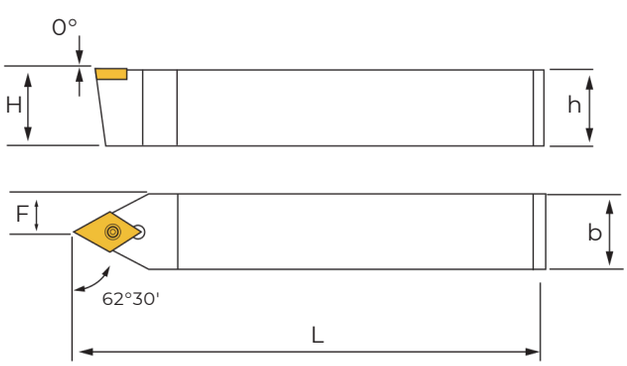

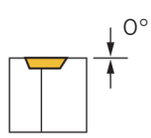

型号 Order Number	尺寸 Size (mm)					刀片 I nse rt	螺钉 S cre w	扳手 Wrench
	h	b	H	F	L			
SDNCN0808K07-S	8	8	8	4	125	DC:070204	M2.5×8	T8
SDNCN1010K07-S	10	10	10	5	125			
SDNCN1212K07-S	12	12	12	6	125			
SDNCN1616K07-S	16	16	16	8	125			
SDNCN1212K11-S	12	12	12	6	125	DC:11T308	M4×10	T15
SDNCN1616K11-S	16	16	16	8	125			

External Turning Tool Holder

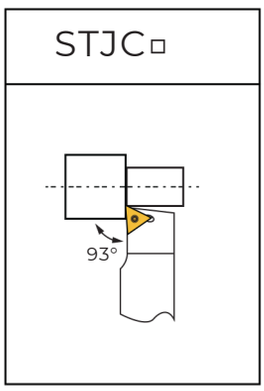

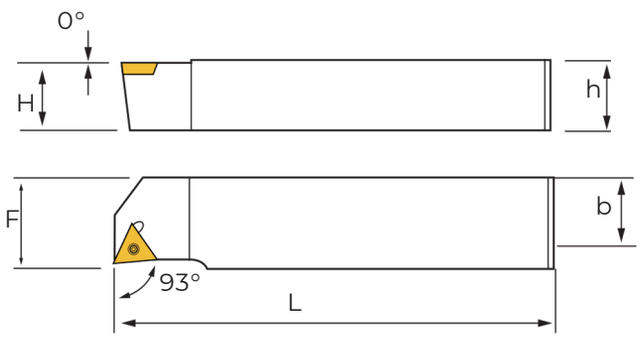

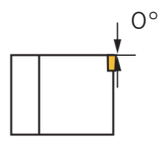

型号 Order Number		尺寸 Size (mm)					刀片 I nse rt	螺钉 S cre w	扳手 Wrench
左刀/ Le ft	右刀/Right	h	b	H	F	L			
S T JCL1010K11- S	S T JCR 1010K11- S	10	10	10	10	125	TC:110204	M2.5×6	T8
S T JCL1212K11- S	S T JCR 1212K11- S	12	12	12	12	125			
S T CJL1616K11- S	STCJR1616K11-S	16	16	16	16	125			

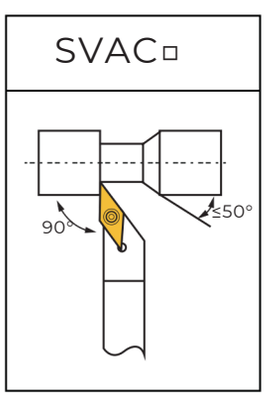

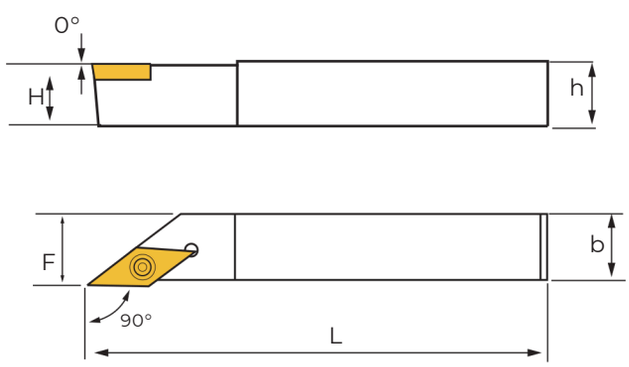

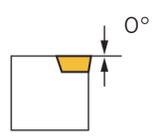

型号 Order Number		尺寸 Size (mm)					刀片 I nse rt	螺钉 S cre w	扳手 Wrench
左刀/ Le ft	右刀/Right	h	b	H	F	L			
SVACL0808K11-S	SVACL0808K11-S	8	8	8	8	125	VC:110304	M2.5×6	T8
SVACL1010K11-S	SVACL1010K11-S	10	10	10	10	125			
SVACL1212K11-S	SVACL1212K11-S	12	12	12	12	125			
SVACL1616K11-S	SVACL1616K11-S	16	16	16	16	125			
SVACL1212K16-S	SVACL1212K16-S	12	12	12	12	125	VC:160404	M4×10	T15
SCACL1616K16-S	SCACL1616K16-S	16	16	16	16	125			

External Turning Tool Holder

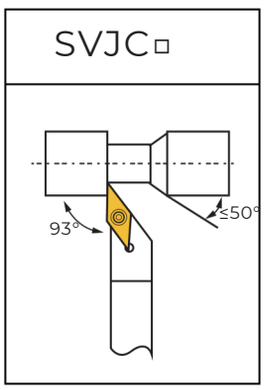

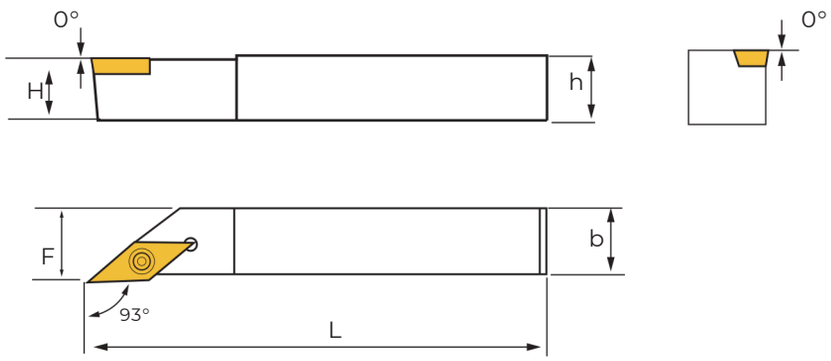

型号 Order Number		尺寸 Size (mm)					刀片 I nse rt	螺钉 S cre w	扳手 Wrench
左刀/ Le ft	右刀/Right	h	b	H	F	L			
S VJCL0808K11- S	SVJCR0808K11-S	8	8	8	8	125	VC:110304	M2.5×6	T8
S VJCL1010K11- S	SVJCR1010K11-S	10	10	10	10	125			
S VJCL1212K11- S	SVJCR1212K11-S	12	12	12	12	125			
S VJCL1616K11- S	SVJCR1616K11-S	16	16	16	16	125			
S VJCL1212K16- S	SVJCR1212K16-S	12	12	12	12	125	VC:160404	M4×10	T15
S VJCL1616K16- S	SVJCR1616K16-S	16	16	16	16	125			

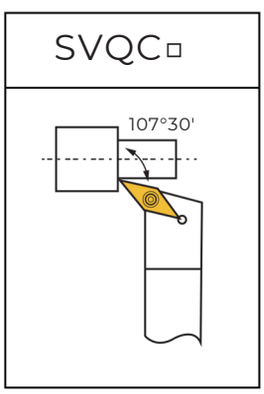

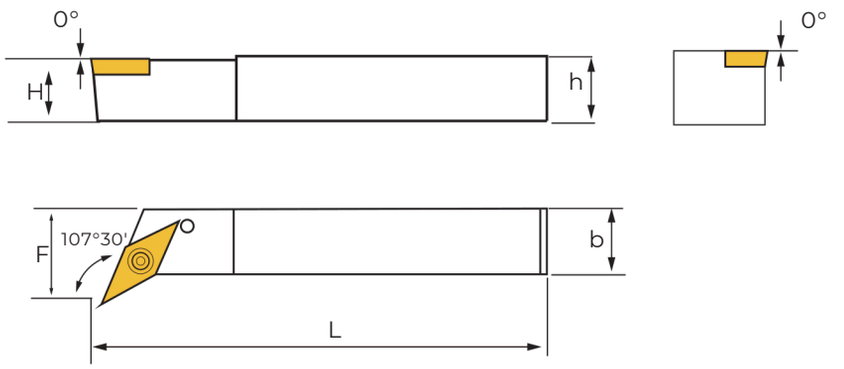

型号 Order Number		尺寸 Size (mm)					刀片 I nse rt	螺钉 S cre w	扳手 Wrench
左刀/ Le ft	右刀/Right	h	b	H	F	L			
SVQCL1212K11-S	SVQCR1212K11-S	12	12	12	20	125	VC:110304	M2.5×6	T8
SVQCL1616K11-S	SVQCR1616K11-S	16	16	16	24	125			

External Turning Tool Holder

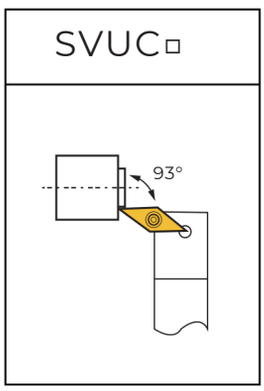

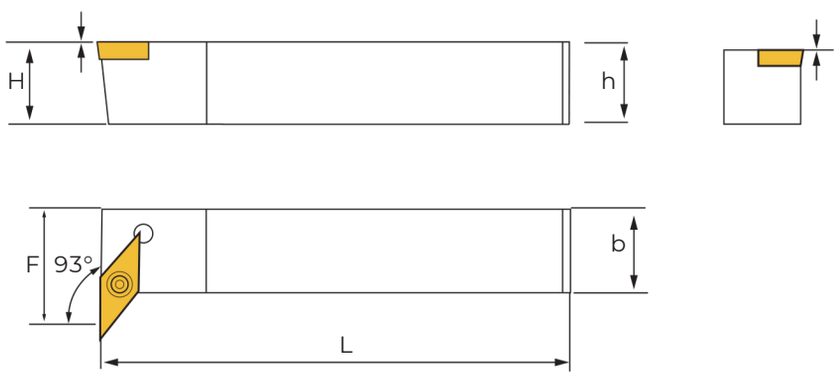

型号 Order Number		尺寸 Size (mm)					刀片 I nse rt	螺钉 S cre w	扳手 Wrench
左刀/ Le ft	右刀/Right	h	b	H	F	L			
S VUCL1212K11- S	SVUCR1212K11-S	12	12	12	20	125	VC:110304	M2.5×6	T8
S VUCL1616K11- S	SVUCR1616K11-S	16	16	16	24	125			

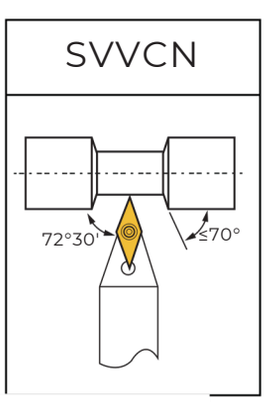

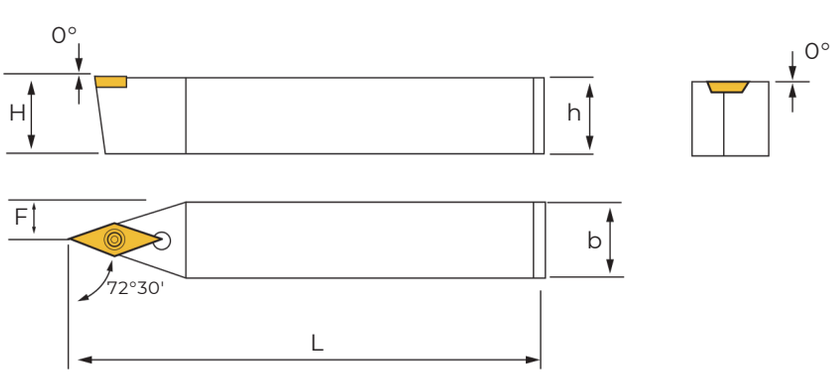

型号 Order Number	尺寸 Size (mm)					刀片 I nse rt	螺钉 S cre w	扳手 Wrench
	h	b	H	F	L			
SVVCN0808K11-S	8	8	8	4	125	VC:110304	M2.5×6	T8
SVVCN1010K11-S	10	10	10	5	125			
SVVCN1212K11-S	12	12	12	6	125			
SVVCN1616K11-S	16	16	16	8	125			

刀杆形式
Type of tool holder

代号 Code	类型/Type
A	钢杆+内冷却孔 Steel tool holder with oil-hole
C	硬质合金杆 Cemented carbide tool holder
D	硬质合金杆+内冷却孔 Cemented carbidetool holder with oil holder
S	钢杆 Steel tool holder
X	使用特殊刀片 Special inserts applied

刀杆直径
Diameter of tool holder

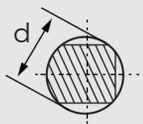

代号/Code	直径 Diameter
08	08
10	10
16	16
20	20
25	25
32	32
40	40
50	50

刀杆长度
Length of tool holder



代号/Code	长度 Length
H	100
K	125
M	150
N	160
Q	180
R	200
S	250
T	300
U	350
V	400

压紧方式
Clamping system

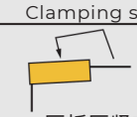

C-压板压紧式 Top clamping



M-复合压紧式 Top and hole clamping



P-杠杆压紧式 Hole clamping



S-螺钉压紧式 Screw on

刀片形状
Insert shape



C



D



R



S



T



V



W

S 16 R S D U

Tool holder style and approach angle

A	B	C	D	E	F	G	H
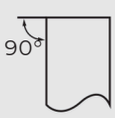		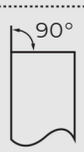	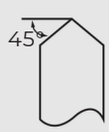	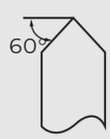	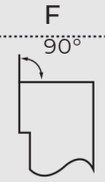	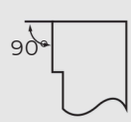	

J	K	L	M	N	O	P	Q
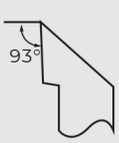		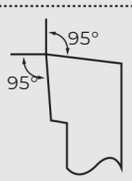	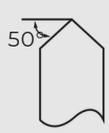				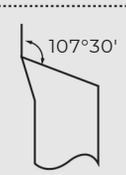

R	S	T	U	V	K	X	
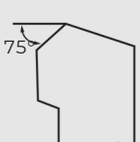			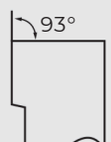		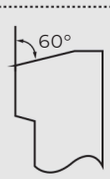	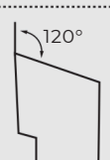	

刀片后角
Clearancr angle of insert

B
C
D
E
N
P

切削方向
Cutting angle of insert

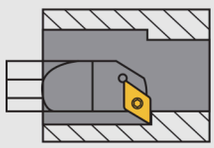

L-左手
L-Left hand

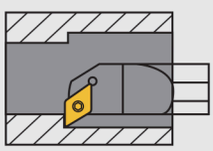

R-右手
R-Right hand

制造商选项
Manufacturer option

D	加大偏置量 f尺寸+1.0mm Increasa offset f size +1.0mm
E	加大偏置量 f尺寸+2.0mm Increasa offset f size +2.0mm
R	圆刀柄 Round shank
W	楔块夹紧 Wedge shank
X	背镗 Back boring

C R 07 E

切削刃长
Length of cutting edge

刀片形状 Inserts shape	C	D	R	S	T	V	W
	80°	55°		90°	60°	35°	80°
内接圆I.C/Inscribed circle (mm)	切削刃长度/Length of cutting edge (mm)						
5.556	---	---	---	---	09	---	---
6.350	06	07	---	---	11	---	---
9.525	09	11	09	09	16	16	06
12.700	12	15	12	12	22	22	08
15.875	16	19	15	15	27	---	---
19.050	19	---	19	19	33	---	---
25.400	25	---	25	25	44	---	---
32.000	---	---	32	---	---	---	---

Internal Turning Tool Holder

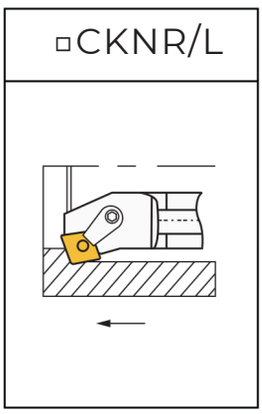

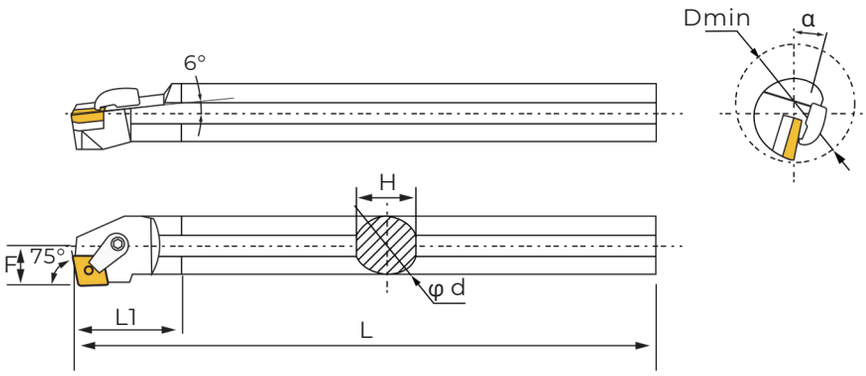

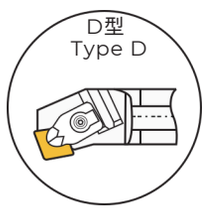

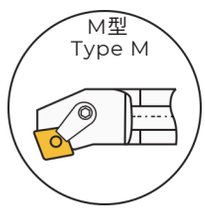

型号 Order Number		尺寸 Size (mm)							刀片 I nse rt	刀垫 Shim	杠销 Lock Pin	扳手 Wrench	压板 Cla m p	双头螺栓 S cre w	扳手 Wrench
左刀/ Le ft	右刀/Right	φ Dmin	φ d	L	L1	H	F	α°							
S 20R - MCKNL12	S 20R - MCKNR 12	26	20	200	45	19	14	15°	CN:1204	-	CTM613	L2.5	HL1810	ML0620	L3
S 25S - MCKNL12	S 25S - MCKNR 12	32	25	250	45	24	16.5	12°							
S 32T - MCKNL12	S 32T - MCKNR 12	40	32	300	50	30	22.5	17°		MC1204	CTM617	L2.5	HL1813	ML0625	L3
S 40T - MCKNL12	S 40T - MCKNR 12	50	40	300	55	38	26	15°							

型号 Order Number	尺寸 Size (mm)							刀片 I nse rt	刀垫 Shim	刀垫螺钉 Serew	压板 Cla m p	压板螺钉 S cre w	弹簧 S p ring	扳手 Wrench
	φ Dmin	φ d	F	L	L1	H	α°							
S 20R - DCKNR / L12	26	20	14	200	45	19	15°	CN:1204	-	-	D5260	DM5×21	GB98-7	L3.0
S 25S - DCKNR / L12	32	25	16.5	250	45	24	12°							
S 32T - DCKNR / L12	40	32	22.5	300	50	30	17°		MC1204	M6×10				
S 40T - DCKNR / L12	50	40	26	300	55	38	15°							
S 50T - DCKNR / L12	60	50	33	350	70	48	12°							

Internal Turning Tool Holder

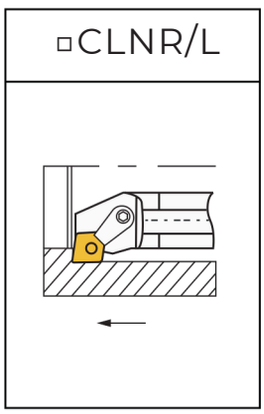

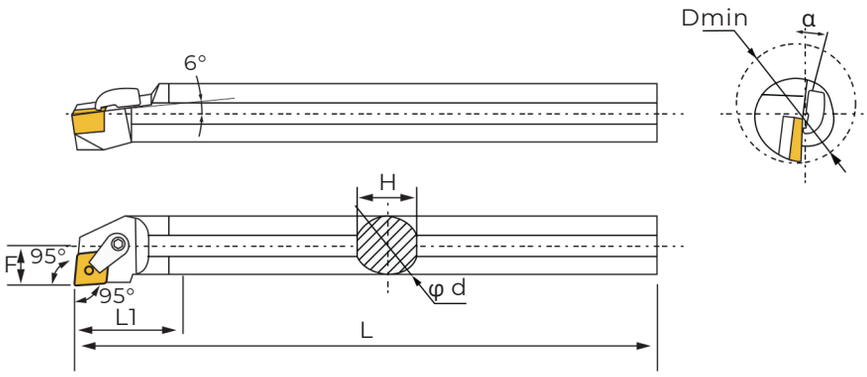

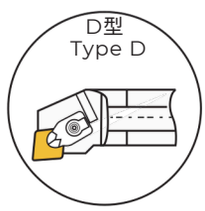

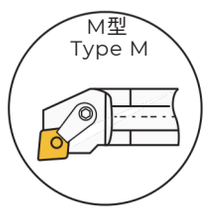

型号 Order Number		尺寸 Size (mm)							刀片 I nse rt	刀垫 Shi m	杠销 Lock Pin	扳手 Wrench	压板 Cla m p	双头螺栓 S cre w	扳手 Wrench
左刀/ Le ft	右刀/Right	φ Dmin	φ d	L	L1	H	F	α°							
S20R-MCLNL12	S20R-MCLNR12	25	20	200	45	19	14	15°	CN:1204	-	CTM613	L2.5	HL1810	ML0620	L3
S25S-MCLNL12	S25S-MCLNR12	32	25	250	45	24	16.5	12°							
S32T-MCLNL12	S32T-MCLNR12	40	32	300	50	30	22.5	17°		MC1204	CTM617	L2.5	HL1813	ML0625	L3
S40T-MCLNL12	S40T-MCLNR12	50	40	300	55	38	26	15°							
S40T-MCLNL16	S40T-MCLNR16	50	40	300	55	38	26	15°	CN:1604	MC1604	CTM822	L3.0	HL2217	ML0830	L4

型号 Order Number	尺寸 Size (mm)							刀片 I nse rt	刀垫 Shi m	刀垫螺钉 Serew	压板 Cla m p	压板螺钉 S cre w	弹簧 S p ring	扳手 Wrench
	φ Dmin	φ d	L	L1	H	F	α°							
S 20R - DCLNR / L12	26	20	200	45	19	12	15°	CN:1204	-	-	D5260	DM5×21	GB98-7	L3.0
S 25S - DCLNR / L12	35	25	250	45	24	16.5	12°							
S 32T - DCLNR / L12	40	32	300	50	30	22.5	17°		MC1204	M6×10				
S 40T - DCLNR / L12	50	40	300	55	38	26	15°							
S 45U- DCLNR / L12	55	45	350	65	43	29.5	15°							
S 50U- DCLNR / L12	60	50	350	70	48	31	12°							
S 60V- DCLNR / L12	70	60	400	70	58	35	20°							

Internal Turning Tool Holder

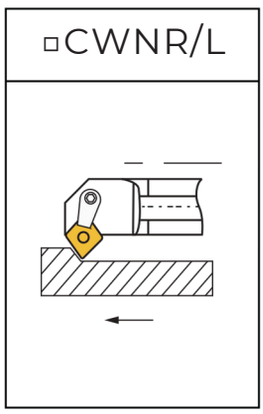

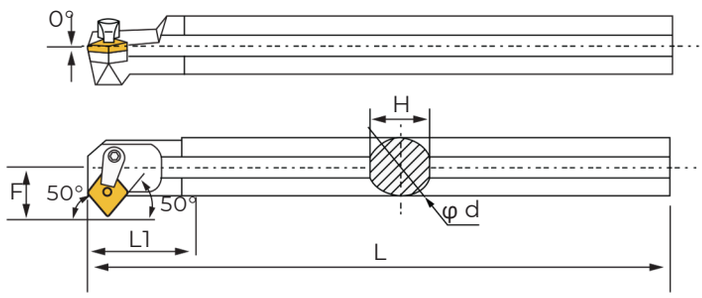

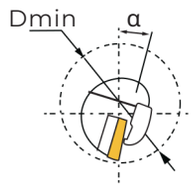

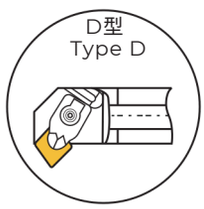

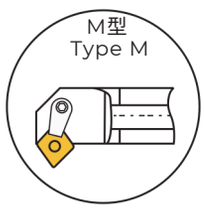

型号 Order Number		尺寸 Size (mm)							刀片 I nse rt	刀垫 Shi m	杠销 Lock Pin	扳手 Wrench	压板 Cla m p	双头螺栓 S cre w	扳手 Wrench
左刀/ Le ft	右刀/Right	φ Dmin	φ d	L	L1	H	F	α°							
S20R-MCWNL12	S20R-MCWNR12	30	20	200	45	19	14	15°	CN:1204	-	CTM613	L2.5	HL1810	ML0620	L3
S25S-MCWNL12	S25S-MCWNR12	32	25	250	45	24	19.5	12°							
S32T-MCWNL12	S32T-MCWNR12	42	32	300	50	30	23.5	17°		MC1204	CTM617	L2.5	HL1813	ML0625	L3
S40T-MCWNL12	S40T-MCWNR12	50	40	300	55	38	26	15°							

Internal Turning Tool Holder

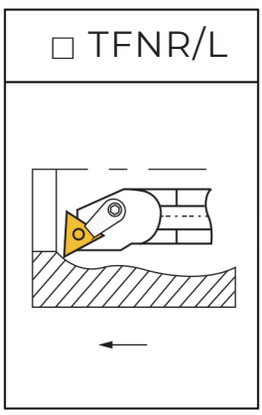

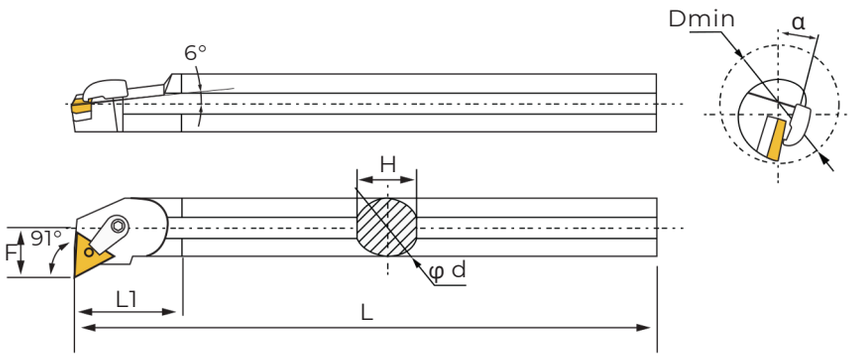

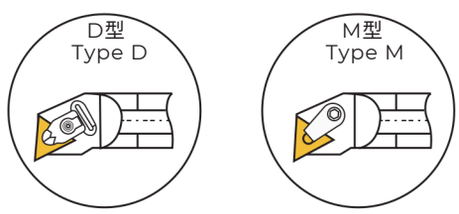

型号 Order Number		尺寸 Size (mm)							刀片 I nse rt	刀垫 Shi m	杠销 Lock Pin	扳手 Wrench	压板 Cla m p	双头螺栓 S cre w	扳手 Wrench
左刀/ Le ft	右刀/Right	φ Dmin	φ d	L	L1	H	F	α°							
S20R-MTFNL16	S20R-MTFNR16	25	10	200	40	19	13	15°	TN:1604	-	CTM510	L2.0	HL1810	ML0620	L3
S25S-MTFNL16	S25S-MTFNR16	32	25	250	45	24	16.5	12°							
S32T-MTFNL16	S32T-MTFNR16	41	32	300	54	30	22.5	17°		MT1603	CTM513	L2.0	HL1813	ML0625	L3
S40T-MTFNL16	S40T-MTFNR16	50	40	300	60	38	26.5	15°							

型号 Order Number	尺寸 Size (mm)							刀片 I nse rt	刀垫 Shi m	刀垫螺钉 S cre w	压板 Cla m p	压板螺钉 Serew	弹簧 S p ring	扳手 Wrench
	φ Dmin	φ d	L	L1	H	F	α°							
S 20R - DT FNR / L16	25	20	200	40	19	13	15°	TN:1604	-	-	D3230	DM5×21	GB98-7	L3.0
S 25S - DT FNR / L16	32	25	250	45	24	16.5	12°							
S 32T - DT FNR / L16	41	32	300	54	30	22.5	17°		MT1603	M5×9				
S 40T - DT FNR / L16	50	40	300	60	38	26.5	15°							
S 50U- DT FNR / L16	60	50	350	65	48	31	12°							

STU SHOPTOOLUSA

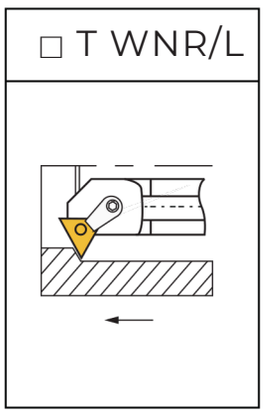

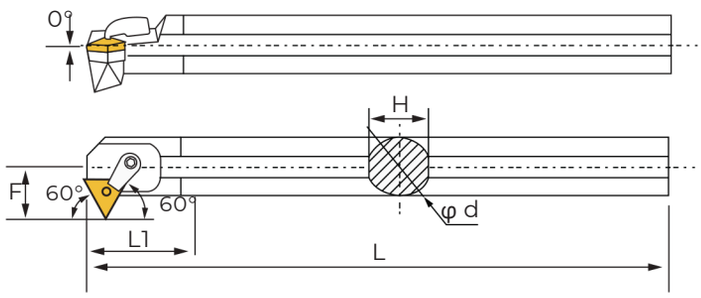

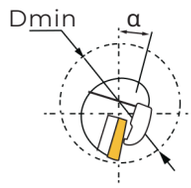

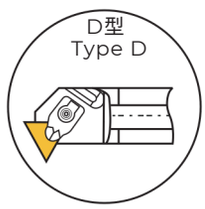

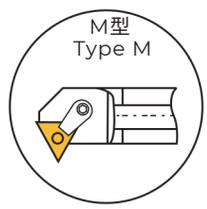

型号 Order Number		尺寸 Size (mm)							刀片 I nse rt	刀垫 Shi m	杠销 Lock Pin	扳手 Wrench	压板 Cla m p	双头螺栓 S cre w	扳手 Wrench
左刀/ Le ft	右刀/Right	φ Dmin	φ d	L	L1	H	F	α°							
S20R-MTWNL16	S20R-MTWNR16	27	20	200	40	19	14	15°	TN:1604	-	CTM510	L2.0	HL1810	ML0620	L3
S25S-MTWNL16	S25S-MTWNR16	32	25	250	45	24	16.5	12°							
S32T-MTWNL16	S32T-MTWNR16	39	32	300	54	30	20	17°		MT1603	CTM513	L2.0	HL1813	ML0625	L3

型号 Order Number	尺寸 Size (mm)							刀片 I nse rt	刀垫 Shi m	刀垫螺钉 Serew	压板 Cla m p	压板螺钉 S cre w	弹簧 S p ring	扳手 Wrench
	φ Dmin	φ d	L	L1	H	F	α°							
S20R-DTWNR/L16	27	20	200	40	19	14	15°	TN:1604	-	-	D3230	DM5×21	GB98-7	L3.0
S25S-DTWNR/L16	32	25	250	45	24	16.5	12°							
S32T-DTWNR/L16	39	32	300	54	30	20	17°		MT1603	M5×9				
S40T-DTWNR/L16	50	40	300	60	38	24	15°							
S50U-DTWNR/L16	57	50	350	65	48	29	12°							

Internal Turning Tool Holder

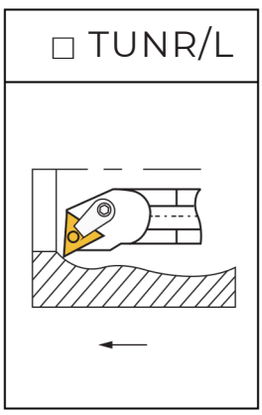

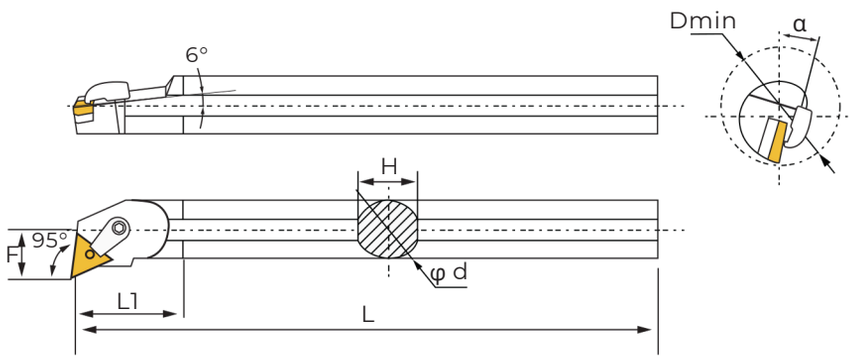

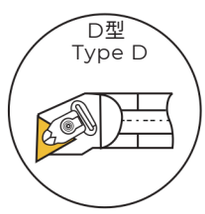

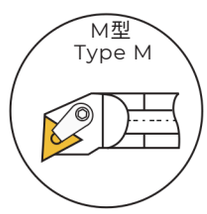

型号 Order Number		尺寸 Size (mm)							刀片 I nse rt	刀垫 Shi m	杠销 Lock Pin	扳手 Wrench	压板 Cla m p	双头螺栓 S cre w	扳手 Wrench
左刀/ Le ft	右刀/Right	φ Dmin	φ d	L	L1	H	F	α°							
S20R-MTUNL16	S20R-MTUNR16	30	20	200	45	19	17	15°	TN:1604	-	CTM510	L2.0	HL1810	ML0620	L3
S25S-MTUNL16	S25S-MTUNR16	35	25	250	45	24	19.5	12°							
S32T-MTUNL16	S32T-MTUNR16	42	32	300	50	30	23.5	17°		MT1603	CTM513	L2.0	HL1813	ML0625	L3
S40T-MTUNL16	S40T-MTUNR16	50	40	300	55	38	26	15°							

型号 Order Number	尺寸 Size (mm)							刀片 I nse rt	刀垫 Shi m	刀垫螺钉 Serew	压板 Cla m p	压板螺钉 S cre w	弹簧 S p ring	扳手 Wrench
	φ Dmin	φ d	L	L1	H	F	α°							
S20R-DTUNR/L16	25	20	200	40	19	13	15°	TN:1604	-	-	D3230	DM5×21	GB98-7	L3.0
S25S-DTUNR/L16	32	25	250	45	24	16.5	12°							
S32T-DTUNR/L16	41	32	300	54	30	22.5	17°		MT1603	M5×9				
S40T-DTUNR/L16	50	40	300	60	38	26.5	15°							
S50U-DTUNR/L16	60	50	350	65	48	31	12°							

Internal Turning Tool Holder

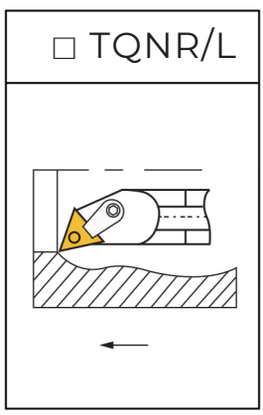

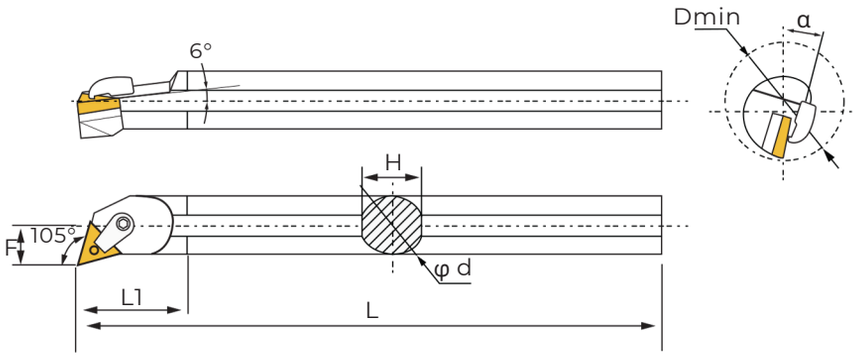

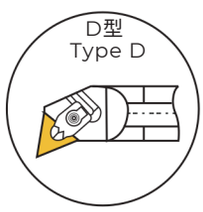

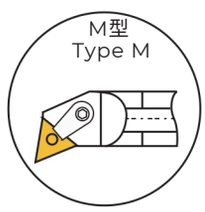

型号 Order Number		尺寸 Size (mm)							刀片 I nse rt	刀垫 Shi m	杠销 Lock Pin	扳手 Wrench	压板 Cla m p	双头螺栓 S cre w	扳手 Wrench
左刀/ Le ft	右刀/Right	φ Dmin	φ d	L	L1	H	F	α°							
S20R-MTQNL16	S 20R - MT QNR 16	25	20	200	40	19	12.5	15°	TN:1604	-	CTM510	L2.0	HL1810	ML0620	L3
S25S-MTQNL16	S 25S - MT QNR 16	32	25	250	45	24	16	12°							
S32T-MTQNL16	S 32T - MT QNR 16	41	32	300	54	30	22.5	17°		MT1603	CTM513	L2.0	HL1813	ML0625	L3
S40T-MTQNL16	S 40T - MT QNR 16	50	40	300	60	38	26.5	15°							

Internal Turning Tool Holder

□ SKNR/L

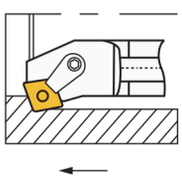

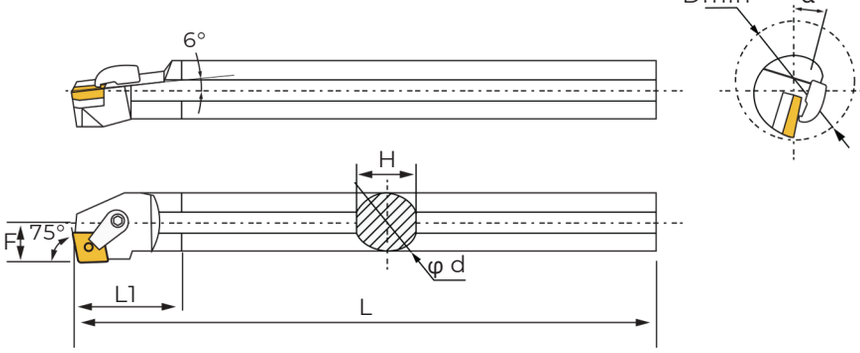

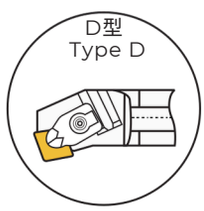

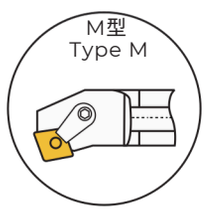

型号 Order Number		尺寸 Size (mm)							刀片 I nse rt	刀垫 Shi m	杠销 Lock Pin	扳手 Wrench	压板 Cla m p	双头螺栓 S cre w	扳手 Wrench
左刀/ Le ft	右刀/Right	φ Dmin	φ d	L	L1	H	F	α°							
S20R-MSKNL12	S20R-MSKNR12	32	20	200	40	19	14	15°	SN:1204	-	CTM613	L2.5	HL1810	ML0620	L3
S25S-MSKNL12	S25S-MSKNR12	32	25	250	45	24	16.1	12°							
S32T-MSKNL12	S32T-MSKNR12	40	32	300	50	30	22	17°		MS1204	CTM617	L2.5	HL1813	ML0625	L3
S40T-MSKNL12	S40T-MSKNR12	50	40	300	55	38	27	15°							
S50U-MSKNL12	S50U-MSKNR12	60	50	350	65	48	30	12°							

型号 Order Number	尺寸 Size (mm)							刀片 I nse rt	刀垫 Shi m	刀垫螺钉 Serew	压板 Cla m p	压板螺钉 S cre w	弹簧 S p ring	扳手 Wrench
	φ Dmin	φ d	L	L1	H	F	α°							
S 20R - DS KNR / L12	26	20	200	45	19	14	15°	SN:1204	-	-	D5260	DM5×21	GB98-7	L3.0
S 25S - DS KNR / L12	32	25	250	45	24	17	12°							
S 32T - DS KNR / L12	40	32	300	50	30	22	17°		MS1204	M6×10				
S 40T - DS KNR / L12	50	40	300	55	38	27	15°							
S 50U- DS KNR / L12	63	50	350	70	48	34	12°							

Internal Turning Tool Holder

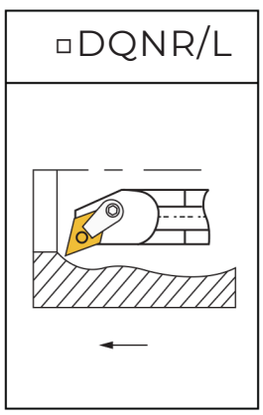

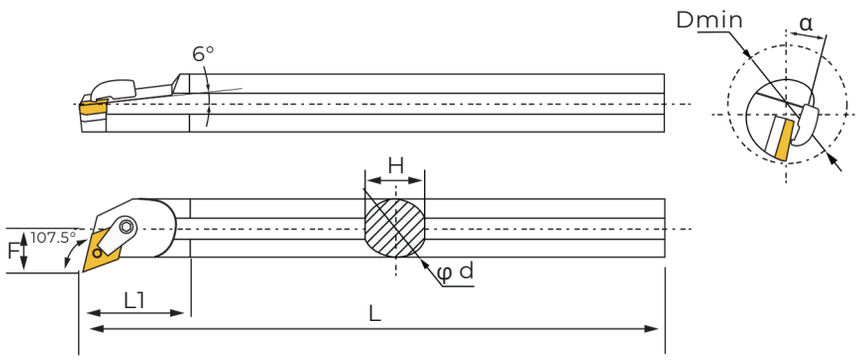

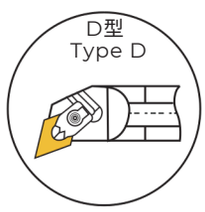

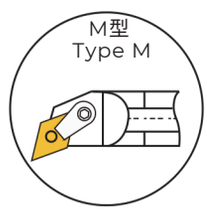

型号 Order Number		尺寸 Size (mm)							刀片 Insert	刀垫 Shim	杠销 Lock Pin	扳手 Wrench	压板 Clamp	双头螺栓 Screw	扳手 Wrench
左刀/ Left	右刀/Right	φ Dmin	φ d	L	L1	H	F	α°							
S 25S - MDQNL15	S 25S - MDQNR 15	32	25	250	45	24	17	12°	DN:1504	-	CTM613	L2.5	HL2114	ML0625	L3
S 32T - MDQNL15	S 32T - MDQNR 15	40	32	300	50	30	22.5	17°		MD1506	CTM617	L2.5	HL2114	ML0625	L3
S 40T - MDQNL15	S 40T - MDQNR 15	50	40	300	60	38	27	15°							

型号 Order Number	尺寸 Size (mm)							刀片 Insert	刀垫 Shim	刀垫螺钉 Serew	压板 Clamp	压板螺钉 Screw	弹簧 Spring	扳手 Wrench
	φ Dmin	φ d	L	L1	H	F	α°							
S 25R - DDQNR / L15	32	25	250	45	24	17	12°	DN:1504	-	-	D5260	DM5×21	GB98-7	L3.0
S 32S - DDQNR / L15	40	32	300	50	30	22.5	17°							
S 40T - DDQNR / L15	50	40	300	60	38	26	15°		MD1506	M6×10				
S 50U- DDQNR / L15	63	50	350	70	48	33	15°							

Internal Turning Tool Holder

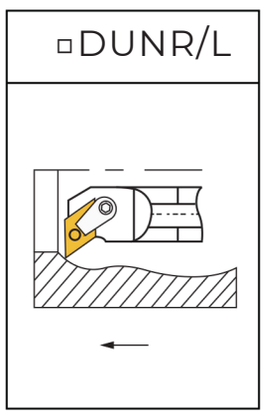

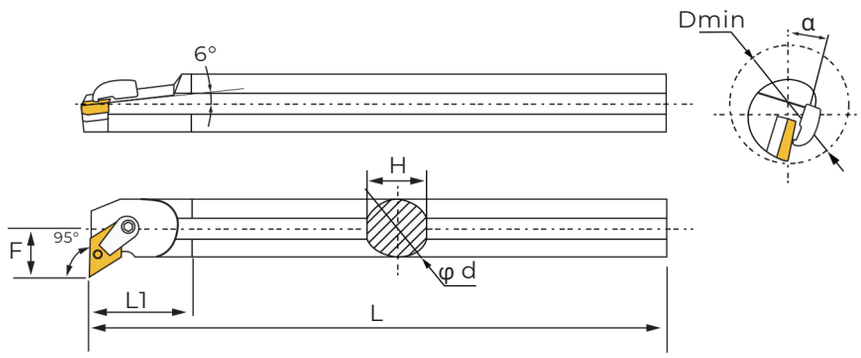

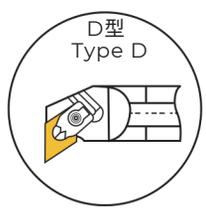

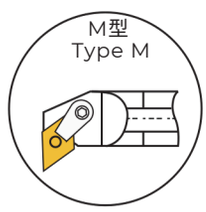

型号 Order Number		尺寸 Size (mm)							刀片 I nse rt	刀垫 Shi m	杠销 Lock Pin	扳手 Wrench	压板 Cla m p	双头螺栓 S cre w	扳手 Wrench
左刀/ Le ft	右刀/Right	φ Dmin	φ d	L	L1	H	F	α°							
S25S-MDUNL15	S25S-MDUNR15	32	25	250	45	24	16	12°	DN:1504	-	CTM613	L2.5	HL2114	ML0625	L3
S32T-MDUNL15	S32T-MDUNR15	40	32	300	50	30	21	17°		MD1506	CTM617	L2.5	HL2114	ML0625	L3
S40T-MDUNL15	S40T-MDUNR15	50	40	300	60	38	26	15°							

型号 Order Number	尺寸 Size (mm)							刀片 I nse rt	刀垫 Shi m	刀垫螺钉 Serew	压板 Cla m p	压板螺钉 S cre w	弹簧 S p ring	扳手 Wrench
	φ Dmin	φ d	L	L1	H	F	α°							
S 25R - DDUNR / L15	32	25	250	45	24	16	12°	DN:1504	-	-	D5260	DM5×21	GB98-7	L3.0
S 32S - DDUNR / L15	40	32	250	50	30	21	17°		MD1506	M6×10				
S 40T - DDUNR / L15	50	40	300	60	38	26	15°							
S 50U- DDUNR / L15	60	50	350	70	48	32	15°							

Internal Turning Tool Holder

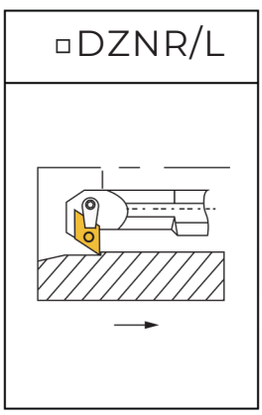

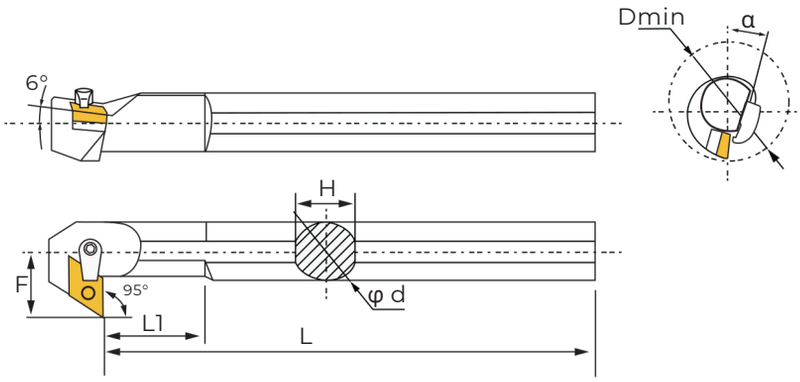

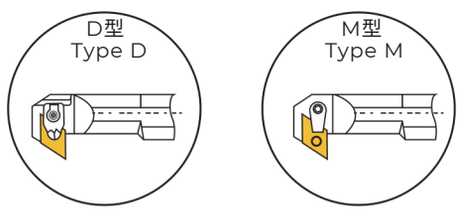

型号 Order Number		尺寸 Size (mm)							刀片 I nse rt	刀垫 Shi m	杠销 Lock Pin	扳手 Wrench	压板 Cla m p	双头螺栓 S cre w	扳手 Wrench
左刀/ Le ft	右刀/Right	φ Dmin	φ d	L	L1	H	F	α°							
S32T-MDZNL15	S32T-MDZNR15	40	32	300	50	30	23	17°	DN:1504	MD1506	CTM617	L2.5	HL2114	ML0625	L3
S40T-MDZNL15	S40T-MDZNR15	50	40	300	55	38	27	15°							

型号 Order Number	尺寸 Size (mm)							刀片 I nse rt	刀垫 Shi m	刀垫螺钉 Serew	压板 Cla m p	压板螺钉 S cre w	弹簧 S p ring	扳手 Wrench
	φ Dmin	φ d	L	L1	H	F	α°							
S 32S - DDZ NR / L15	40	32	250	50	30	23	17°	DN:1504	MD1506	M6×10	D5260	DM5×21	GB98-7	L3.0
S 40T - DDZ NR / L15	50	40	300	55	38	27	15°							
S 50U- DDZ NR / L15	60	50	350	70	48	32	15°							

Internal Turning Tool Holder

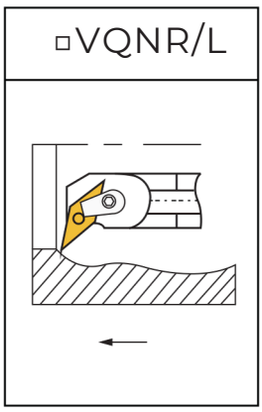

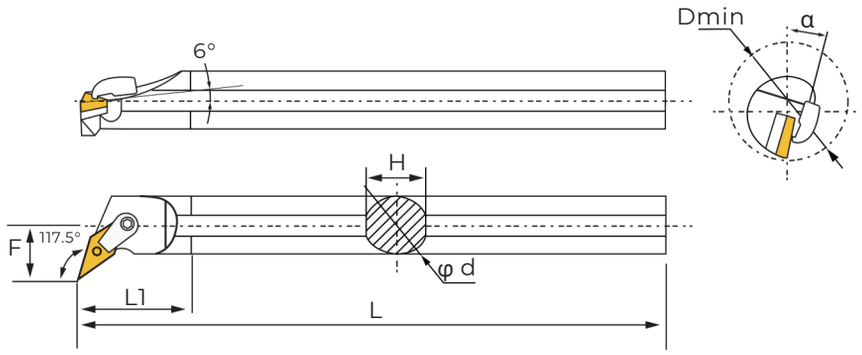

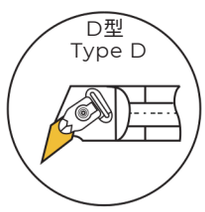

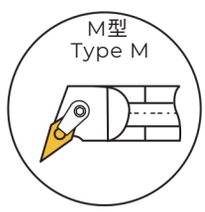

型号 Order Number		尺寸 Size (mm)							刀片 I nse rt	刀垫 Shi m	杠销 Lock Pin	扳手 Wrench	压板 Cla m p	双头螺栓 S cre w	扳手 Wrench
左刀/ Le ft	右刀/Right	φ Dmin	φ d	L	L1	H	F	α°							
S 25S - MVQNL16	S 25S - MVQNR 16	32	25	250	45	24	17	12°	VN:1604	-	CTM510	L2.0	HL2114	ML0625	L3
S 32T - MVQNL16	S 32T - MVQNR 16	50	40	300	55	38	27	17°		MV1603	CTM513	L2.0	HL2114	ML0625	L3
S 4T 0- MVQNL16	S 40T - MVQNR 16	50	40	300	55	38	27	15°							

Internal Turning Tool Holder

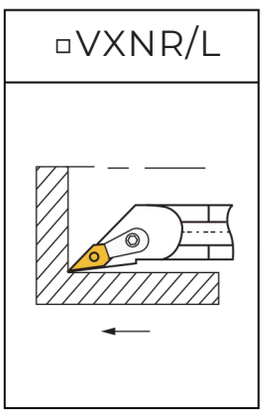

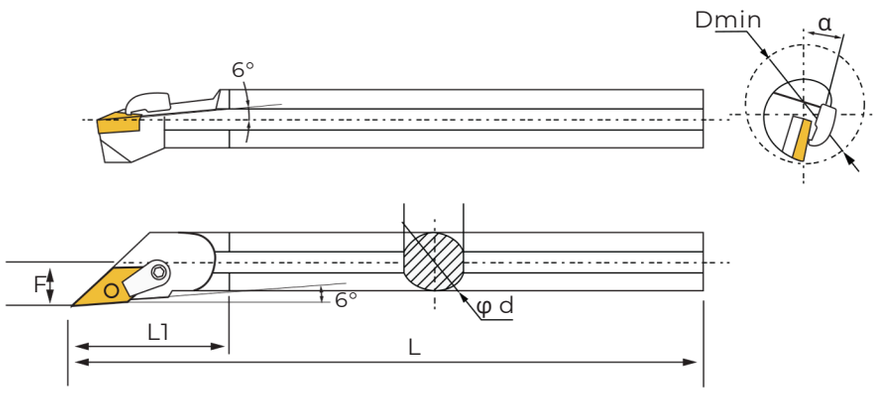

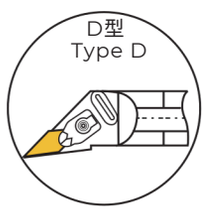

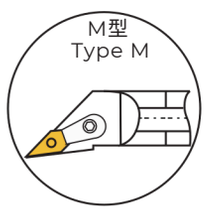

型号 Order Number		尺寸 Size (mm)							刀片 I nse rt	刀垫 Shi m	杠销 Lock Pin	扳手 Wrench	压板 Cla m p	双头螺栓 S cre w	扳手 Wrench
左刀/ Le ft	右刀/Right	φ Dmin	φ d	L	L1	H	F	α°							
S20R-MVXNL16	S20R-MVXNR16	27	20	200	40	19	14	15°	VN:1604	-	CTM510	L2.0	HL2114	ML0625	L3
S25S-MVXNL16	S25S-MVXNR16	32	25	250	45	24	17	12°							
S32T-MVXNL16	S32T-MVXNR16	42	32	300	50	30	23	17°		MV1603	CTM513	L2.0	HL2114	ML0625	L3
S4T0-MVXNL16	S4T0-MVXNR16	50	40	300	55	38	27	15°							

Internal Turning Tool Holder

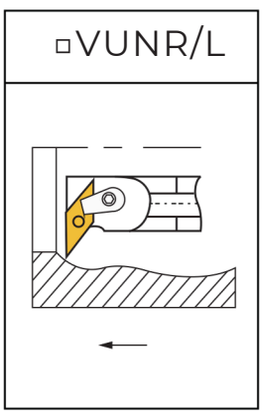

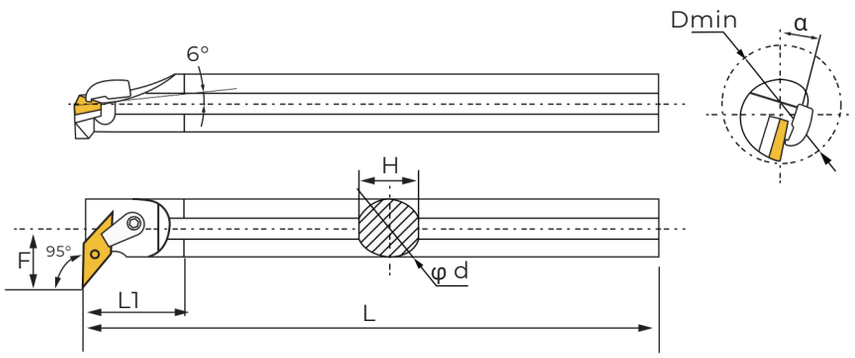

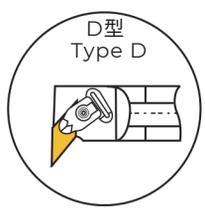

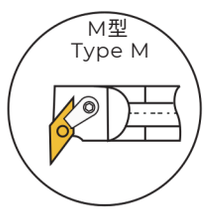

型号 Order Number		尺寸 Size (mm)							刀片 I nse rt	刀垫 Shi m	杠销 Lock Pin	扳手 Wrench	压板 Cla m p	双头螺栓 S cre w	扳手 Wrench
左刀/ Le ft	右刀/Right	φ Dmin	φ d	L	L1	H	F	α°							
S25S-MVUNL16	S25S-MVUNR16	36	25	250	45	24	20	12°	VN:1604	-	CTM510	L2.0	HL2114	ML0625	L3
S32T-MVUNL16	S32T-MVUNR16	42	32	300	55	30	22	17°		MV1603	CTM513	L2.0	HL2114	ML0625	L3
S4T0-MVUNL16	S40T-MVUNR16	50	40	300	55	38	26	15°							

型号 Order Number	尺寸 Size (mm)							刀片 I nse rt	刀垫 Shi m	刀垫螺钉 Serew	压板 Cla m p	压板螺钉 S cre w	弹簧 S p ring	扳手 Wrench
	φ Dmin	φ d	L	L1	H	F	α°						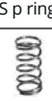	
S 25R - DVUNR / L16	35	25	200	45	24	20	12°	VN:1604	-	-	D3230	DM5×21	GB98-7	L3.0
S 32S - DVUNR / L16	42	32	250	50	30	22	17°		MV1603	M5×9				
S 40T - DVUNR / L16	50	40	300	55	38	26	15°							
S 50U- DVUNR / L16	63	50	350	70	48	32	15°							

Internal Turning Tool Holder

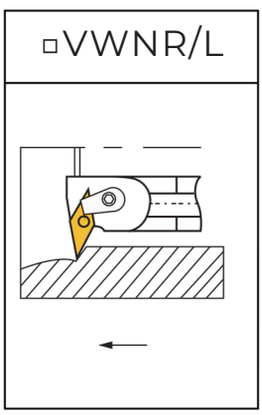

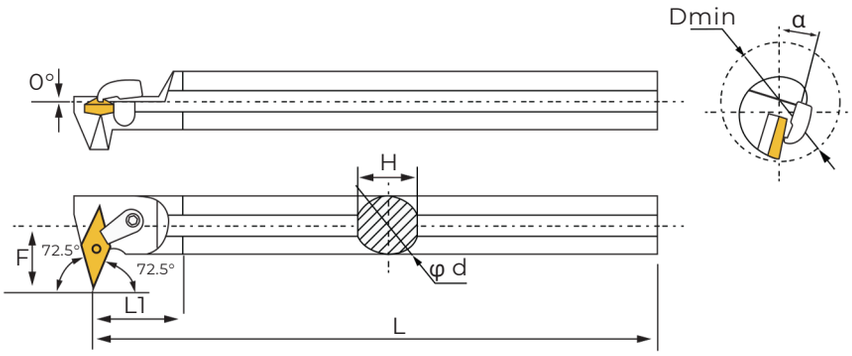

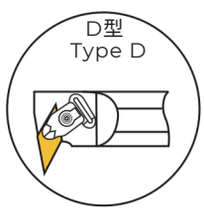

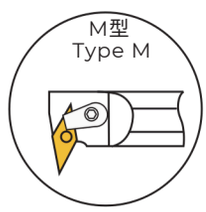

型号 Order Number		尺寸 Size (mm)							刀片 I nse rt	刀垫 Shi m	杠销 Lock Pin	扳手 Wrench	压板 Cla m p	双头螺栓 S cre w	扳手 Wrench
左刀/ Le ft	右刀/Right	φ Dmin	φ d	L	L1	H	F	α°							
S25S-MVWNL16	S25S-MVWNR16	40	25	200	45	24	26	12°	VN:1604	-	CTM51	L2.	HL211	ML062	L
S32T-MVWNL16	S32T-MVWNR16	48	32	250	50	30	30	17°		MV1603	0	0	4	5	3

型号 Order Number	尺寸 Size (mm)							刀片 I nse rt	刀垫 Shi m	刀垫螺钉 Serew	压板 Cla m p	压板螺钉 S cre w	弹簧 S p ring	扳手 Wrench
	φ Dmin	φ d	L	L1	H	F	α°							
S 25R - DVW NR / L16	38	25	200	40	24	26	12°	VN:1604	MV1603	M6×10	D3230	DM5×21	GB98-7	L3.0
S 32S - DVW NR / L16	46	32	250	46	30	30	17°							

Internal Turning Tool Holder

▫WLNR/L

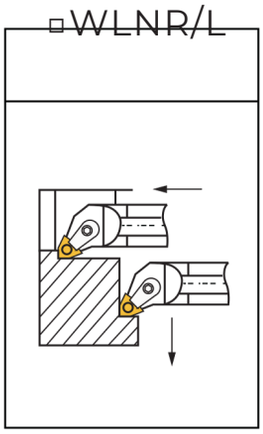

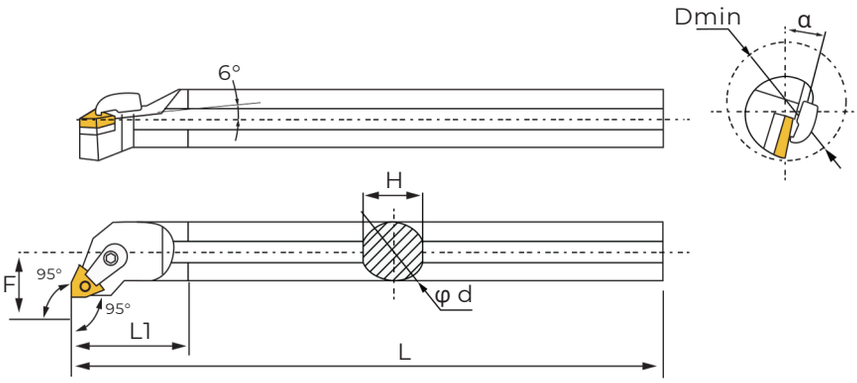

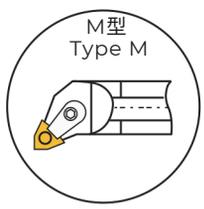

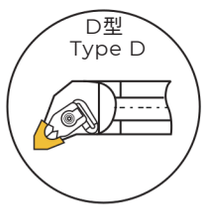

型号 Order Number		尺寸 Size (mm)							刀片 I nse rt	刀垫 Shi m	杠销 Lock Pin	扳手 Wrench	压板 Cla m p	双头螺栓 S cre w	扳手 Wrench
左刀/ Le ft	右刀/Right	φ Dmin	φ d	L	L1	H	F	α°							
S16Q-MWLNL06	S16Q-MWLNR06	20	16	180	35	15	11	18°	MW0804	-	CTM510	L2	HL1813	ML0620	L3
S20R-MWLNL06	S20R-MWLNR06	24	20	200	40	19	13	15°		-	CTM510	L2	HL1810	ML0620	L3
S25S-MWLNL06	S25S-MWLNR06	32	25	250	45	25	17	12°							
S32T-MWLNL06	S32T-MWLNR06	40	32	300	50	30	22	17°		MW0603	CTM513	L2	HL1813	ML0625	L3
S40T-MWLNL06	S40T-MWLNR06	50	40	300	60	37	27	15°							
S20R-MWLNL08	S20R-MWLNR08	25	20	200	40	19	12	15°	MW0804	MW0803	CTM613	L2.5	HL1810	ML0620	L3
S25S-MWLNL08	S25S-MWLNR08	32	25	250	36	23	17	12°							
S32T-MWLNL08	S32T-MWLNR08	40	32	300	50	30	22	17°		MW0803	CTM617	L2.5	HL1813	ML0625	L3
S40T-MWLNL08	S40T-MWLNR08	50	40	300	60	37	27	15°							

型号 Order Number	尺寸 Size (mm)							刀片 I nse rt	刀垫 Shi m	刀垫螺钉 Serew	压板 Cla m p	压板螺钉 S cre w	弹簧 S p ring	扳手 Wrench
	φ Dmin	φ d	L	L1	H	F	α°							
S 20Q- DW LNR / L06	25	20	180	40	19	13	15°	WN:0604	MW0603	M5×9	D3230	DM5×21	GB98-7	L3.0
S25R-DWLNR/L06	32	25	200	45	23	16.5	12°							
S32R-DWLNR/L06	41	32	250	50	30	22	17°							
S40T-DWLNR/L08	50	40	300	55	38	26	15°	WN:0804	WM0804	M6×10	D5260	DM5×21	GB98-7	L3.0
S50U-DWLNR/L08	60	50	350	70	48	31	12°							

Internal Turning Tool Holder

SVX□R/L

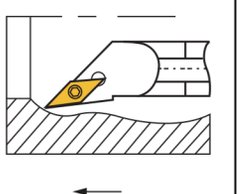

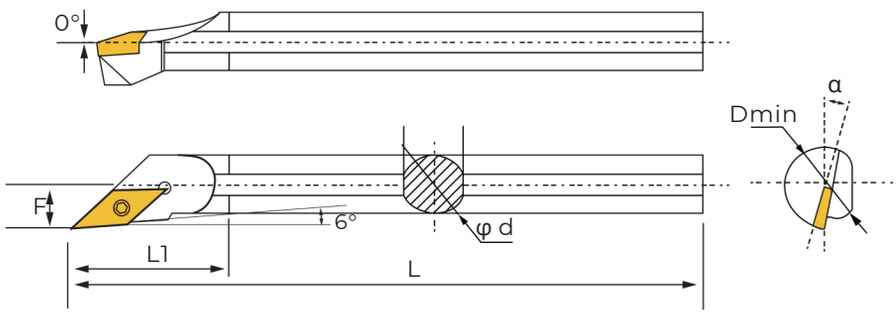

型号 Order Number		尺寸 Size (mm)								刀片 I nse rt	螺钉 S cre w	扳手 Wrench
左刀/ Le ft	右刀/Right	φ Dmin	φ d	F	L	L1	H	α° B	α° C			
S 16Q- S VX - L11	S16Q-SVX-R11	22	16	11.5	180	40	15	10°	8°	VC：1103 VB：1103	M2.5×6	T8
S20R-SVX-L11	S20R-SVX-R11	27	20	13.5	200	45	19	8°	6°			
S20R-SVX-L16	S20R-SVX-R16	27	22	13.5	200	50	19	10°	8°	VC：1604 VB：1604	M4×10	T15
S25S-SVX-L16	S25S-SVX-R16	32	25	16	250	50	24	8°	6°			
S32T-SVX-L16	S32T-SVX-R16	40	32	19.5	300	60	30	10°	8°			
S40T-SVX-L16	S40T-SVX-R16	50	40	23.5	300	65	38	8°	6°			

SVZ□R/L

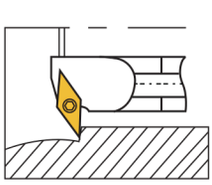

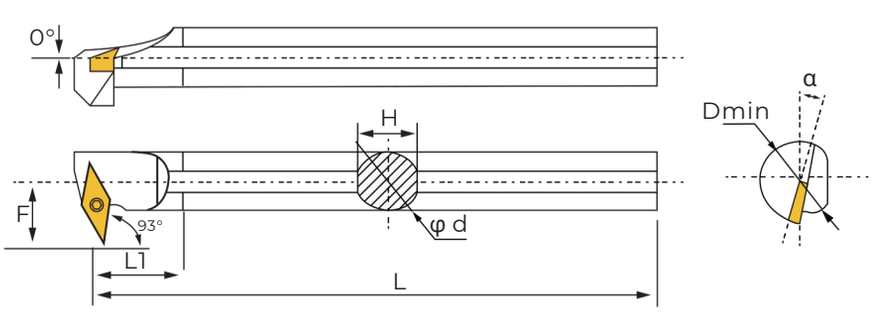

型号 Order Number		尺寸 Size (mm)								刀片 I nse rt	螺钉 S cre w	扳手 Wrench
左刀/ Le ft	右刀/Right	φ Dmin	φ d	F	L	L1	H	α° B	α° C			
S 16Q- S VZ - L11	S16Q-SVZ-R11	22	16	11.5	180	34	15	10°	8°	VC：1103 VB：1103	M2.5×6	T8
S20R-SVZ-L11	S20R-SVZ-R11	27	20	13.5	200	38	19	8°	6°			
S25S-SVZ-L16	S25S-SVZ-R16	34	25	19.5	250	50	20	8°	6°	VC：1604 VB：1604	M4×10	T15
S32T-SVZ-L16	S32T-SVZ-R16	42	32	23.5	300	50	30	10°	8°			
S40T-SVZ-L16	S40T-SVZ-R16	50	40	27	300	60	38	8°	6°			

Internal Turning Tool Holder

SVQ▫R/L

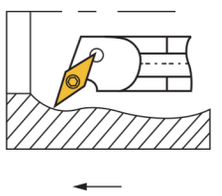

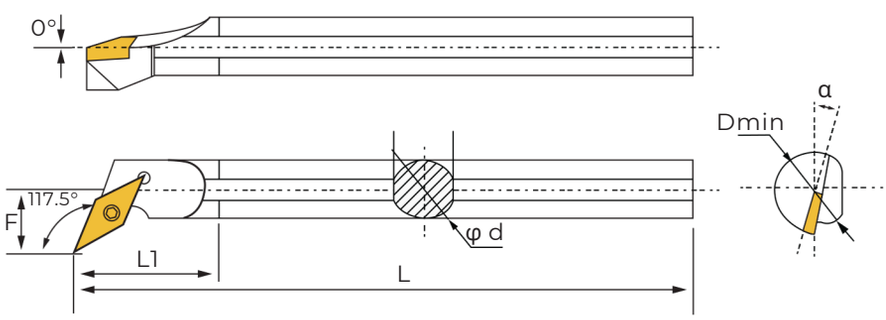

型号 Order Number		尺寸 Size (mm)								刀片 I nse rt	螺钉 S cre w	扳手 Wrench
左刀/ Le ft	右刀/Right	φ Dmin	φ d	F	L	L1	H	α° B	α° C			
S 16Q- S VQ- L11	S 16Q- S VQ- R 11	22	16	11.5	180	35	15	10°	8°	VC：1103 VB：1103	M2.5×6	T8
S 20R - S VQ- L11	S20R-SVQ-R11	27	20	14	200	39	19	8°	6°			
S 20R - S VQ- L16	S20R-SVQ-R16	27	20	14	200	50	19	10°	8°	VC：1604 VB：1604	M4×10	T15
S 25S - S VQ- L16	S25S-SVQ-R16	32	25	16.5	250	50	24	8°	6°			
S 32T - S VQ- L16	S32T-SVQ-R16	41	32	22.5	300	50	30	10°	8°			
S 40T - S VQ- L16	S40T-SVQ-R16	50	40	27	300	55	38	8°	6°			

SVU▫R/L

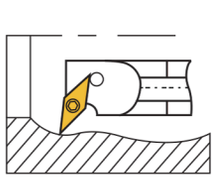

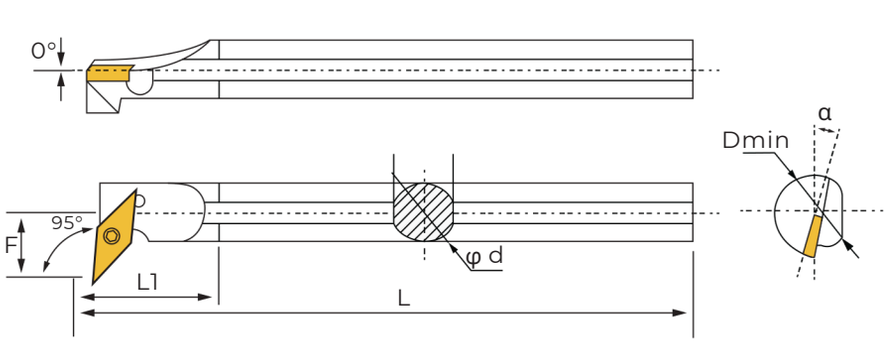

型号 Order Number		尺寸 Size (mm)								刀片 I nse rt	螺钉 S cre w	扳手 Wrench
左刀/ Le ft	右刀/Right	φ Dmin	φ d	F	L	L1	H	α° B	α° C			
S 16Q- S VU- L11	S 16Q- S VU- R 11	22	16	12.5	180	30	15	10°	8°	VC:1103 VB:1103	M2.5×6	T8
S20R-SVU-L11	S20R-SVU-R11	27	20	14	200	32	19	8°	6°			
S20R-SVU-L16	S20R-SVU-R16	31	20	20	200	50	19	10°	8°	VC:1604 VB:1604	M4×10	T15
S25S-SVU-L16	S25S-SVU-R16	35	25	20	250	50	24	8°	6°			
S32T-SVU-L16	S32T-SVU-R16	42	32	22.5	300	50	30	10°	8°			
S40T-SVU-L16	S40T-SVU-R16	51	40	27	300	55	38	8°	6°			

Internal Turning Tool Holder

SVWCR/L

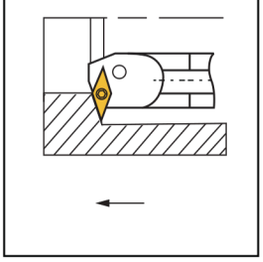

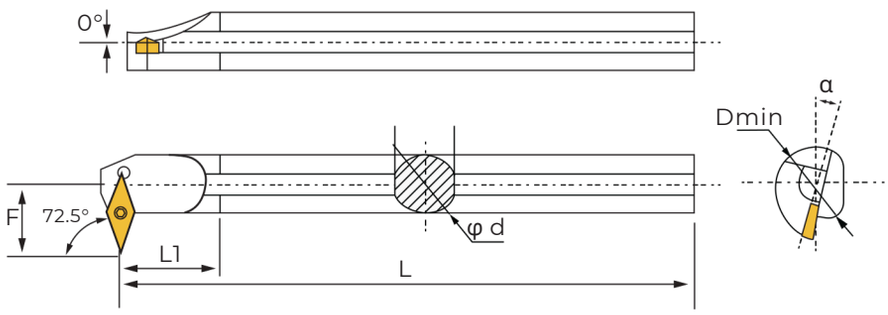

型号 Order Number		尺寸 Size (mm)								刀片 I nse rt	螺钉 S cre w	扳手 Wrench
左刀/ Le ft	右刀/Right	φ Dmin	φ d	F	L	L1	H	α° B	α° C			
S25S-SVW-L16	S25S-SVW-R16	38	25	23	250	33	24	6°	5°	VC:1604 VB:1604	M4×6	T15
S32T-SVW-L16	S32T-SVW-R16	45	32	26	300	41	30	6°	5°			

SWLCR/L

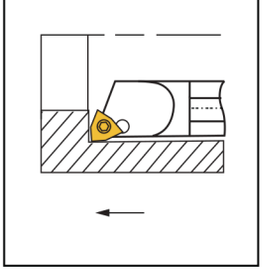

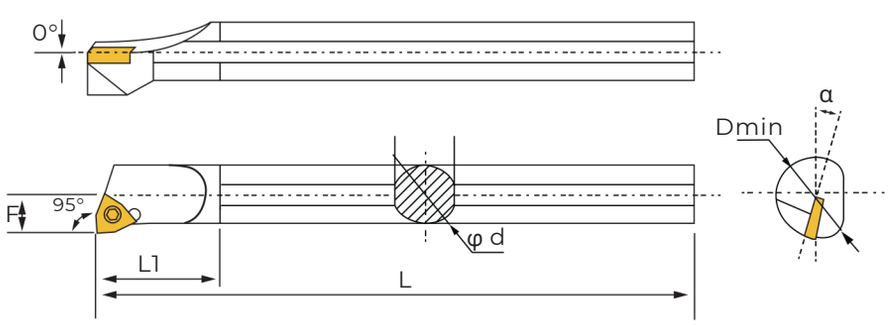

型号 Order Number		尺寸 Size (mm)							刀片 I nse rt	螺钉 S cre w	扳手 Wrench
左刀/ Le ft	右刀/Right	φ Dmin	φ d	F	L	L1	H	α°			
S 08K- S W LCL04	S 08K- S W LCR 04	10	8	5	125	25	7	13°	W C:0402	M3×6	T10
S 10K- S W LCL04	S 10K- S W LCR 04	13	10	6.5	125	30	9	10°			
S12M-SWLCL04	S12M-SWLCR04	16	12	7.5	150	37	11	13°			
S 16Q- S W LCL06	S 16Q- S W LCR 06	20	16	9.5	180	40	15	10°	WC:06T3	M4×10	T15
S20R-SWLCL06	S20R-SWLCR06	25	20	11.5	200	40	19	8°			
S25S-SWLCL06	S25S-SWLCR06	31	25	14	250	40	24	6°			

Internal Turning Tool Holder

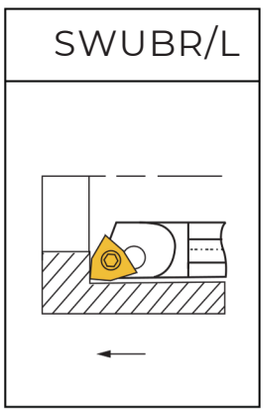

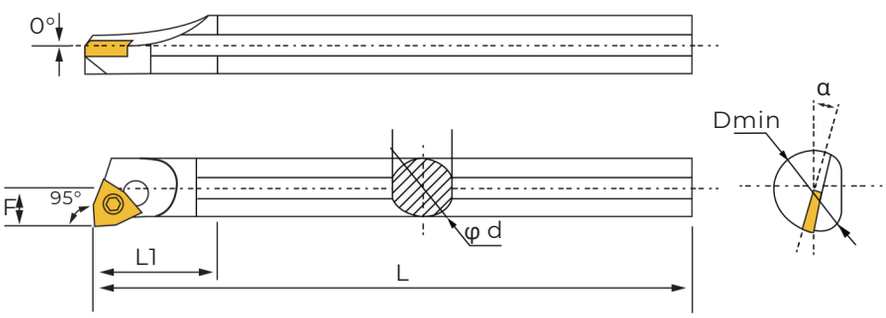

型号 Order Number		尺寸 Size (mm)							刀片 I nse rt	螺钉 S cre w	扳手 Wrench
左刀/ Le ft	右刀/Right	φ Dmin	φ d	F	L	L1	H	α°			
S0805H-SWUBL06	S0805H-SWUBR06	7	8	3.5	100	20	7	12°	W BGT 060102	M2×4	T6
S1006K-SWUBL06	S1006K-SWUBR06	7	10	3.5	125	20	9	12°			
S1207K-SWUBL06	S1207K-SWUBR06	8	12	4	125	25	11	12°			
S1607M-SWUBL06	S1607M-SWUBR06	8	19	4	150	25	15	12°			

Internal Turning Tool Holder

STUCR/L

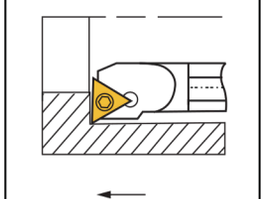

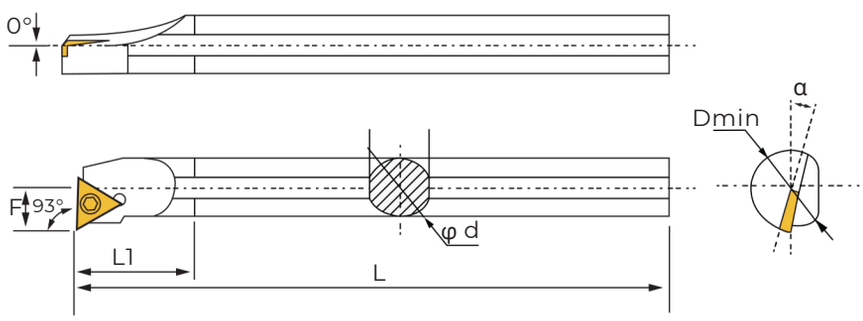

型号 Order Number		尺寸 Size (mm)							刀片 I nse rt	螺钉 S cre w	扳手 Wrench
左刀/ Le ft	右刀/Right	φ Dmin	φ d	F	L	L1	H	α°			
S0806K-STUBL06	S0806K-STUBR06	7	8	3.5	100	20	7	12°	TBGT060102	M2×4	T6
S1006K-STUBL06	S1006K-STUBR06	7	10	3.5	125	20	9	12°			
S1207K-STUBL06	S1207K-STUBR06	8	12	4	125	25	11	12°			
S1607M-STUBL06	S1607M-STUBR06	8	16	4	150	25	15	12°			

型号 Order Number		尺寸 Size (mm)							刀片 I nse rt	螺钉 S cre w	扳手 Wrench
左刀/ Le ft	右刀/Right	φ Dmin	φ d	F	L	L1	H	α°			
S 08K- S T UCL09	S 08K- S T UCR 09	10.5	8	5	125	23	7	15°	T C:0902	M2.2×6	T6
S 10K- S T UCL09	S 10K- S T UCR 09	13.5	10	6	125	24	9	13°			
S 10K- S T UCL11	S 10K- S T UCR 11	13.5	10	6	125	24	9	12°	T C:1102	M2.5×6	T8
S12M-STUCL11	S 12M- S T UCR 11	16	12	7	150	27	11	10°			
S 16Q- S T UCL11	S 16Q- S T UCR 11	20	16	9	180	30	15	8°			
S 20Q- S T UCL11	S 20Q- S T UCR 11	25	20	11	200	35	19	6°			
S25S-STUCL11	S25S-STUCR11	31	25	13.5	250	40	24	4°			
S20R-STUCL16	S20R-STUCR16	25	20	11.5	200	40	19	8°	TC:16T3	M4×10	R15
S25S-STUCL16	S25S-STUCR16	31	25	14	250	40	24	6°			
S32T-STUCL16	S32T-STUCR16	39	32	17.5	300	45	30	4°			

Internal Turning Tool Holder

STFCR/L

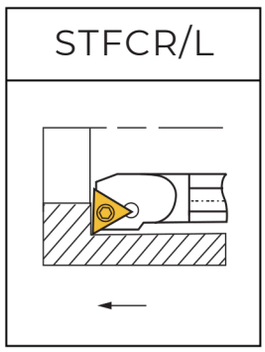

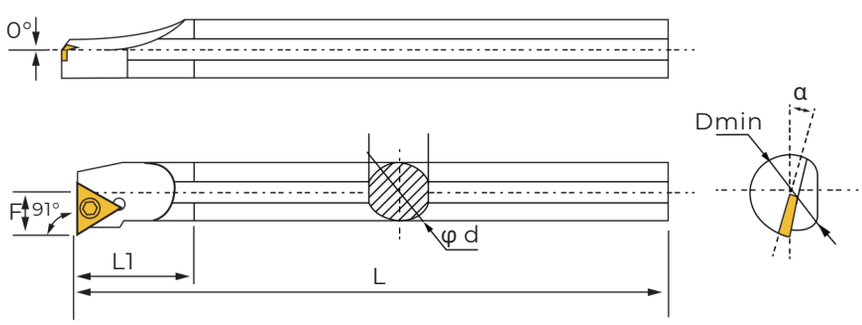

型号 Order Number		尺寸 Size (mm)							刀片 I nse rt	螺钉 S cre w	扳手 Wrench
左刀/ Le ft	右刀/Right	φ Dmin	φ d	F	L	L1	H	α°			
S 08K- S T FCL09	S 08K- S T FCR 09	10.5	8	5	125	23	7	15°	T C:0902	M2.2×6	T7
S 10K- S T FCL09	S 10K- S T FCR 09	13.5	10	6	125	24	9	13°			
S 12M- S T FCL09	S 12M- S T FCR 09	13.5	12	7	150	27	11	12°			
S 10K- S T FCL11	S 10K- S T FCR 11	16	10	6	125	24	9	10°	T C:1102	M2.5×6	T8
S 12M- S T FCL11	S 12M- S T FCR 11	20	12	7	150	27	11	8°			
S 16Q- S T FCL11	S 16Q- S T FCR 11	25	16	9	180	30	14	6°			
S 20R - S T FCL11	S20R-STFCR11	31	20	11	200	35	19	4°			
S 20R - S T FCL16	S20R-STFCR16	25	20	11.5	200	40	19	8°	T C:16 T 3	M4×10	T15
S25S-STFCL16	S25S-STFCR16	31	25	14	250	40	24	6°			
S32T-STFCL16	S32T-STFCR16	39	32	17.5	300	45	30	4°			

ST WCR/L

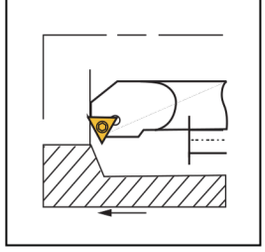

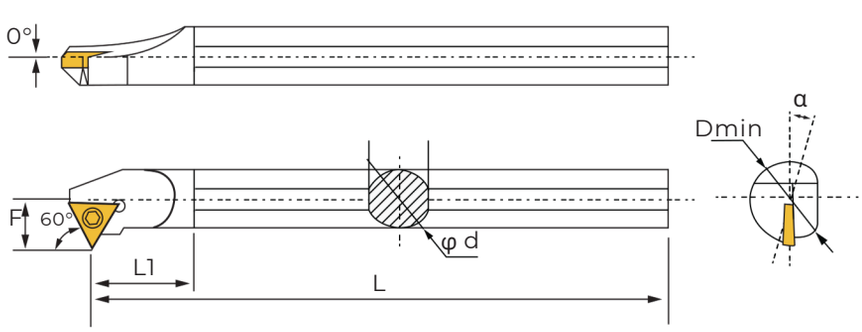

型号 Order Number		尺寸 Size (mm)							刀片 I nse rt	螺钉 S cre w	扳手 Wrench
左刀/ Le ft	右刀/Right	φ Dmin	φ d	F	L	L1	H	α°			
S08K-STWCL09	S08K-STWCR09	11	8	5.5	125	25	7	12°	T C:0902	M2.2×6	T6
S10K-STWCL11	S10K-STWCR11	14	10	8	125	25	9	10°	T C:1102	M2.5×6	T8
S12M-STWCL11	S12M-STWCR11	16	12	9	150	30	11	8°			
S 16Q- S T W CL11	S16Q-STWCR11	20	16	11	180	30	15	6°			
S20R-STWCL11	S20R-STWCR11	25	20	13	200	35	19	4°			
S25S-STWCL16	S25S-STWCR16	32	25	15	150	40	24	2°	TC:16T3	M4×10	T15

Internal Turning Tool Holder

SSS□R/L

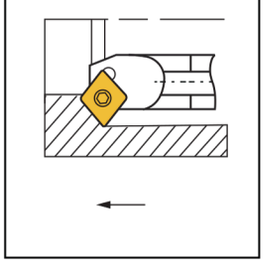

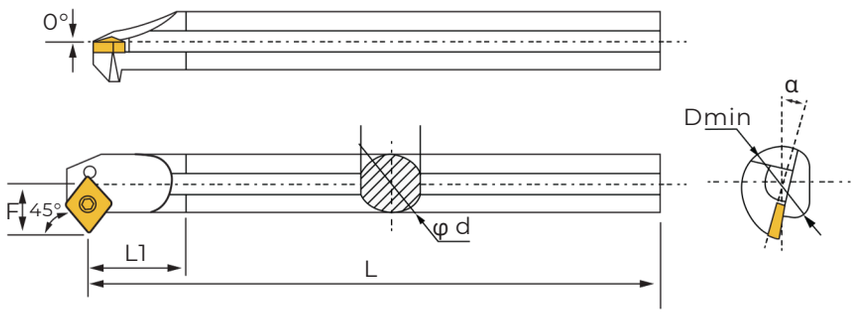

型号 Order Number		尺寸 Size (mm)							刀片 I nse rt	螺钉 S cre w	扳手 Wrench
左刀/ Le ft	右刀/Right	φ Dmin	φ d	F	L	L1	H	α°			
S12M-SSSCL09	S12M-SSSCR09	16	12	8.5	150	30	11	12°	S C:09T 3	M4×8	T15
S16Q-SSSCL09	S16Q-SSSCR09	22	16	11.5	180	35	15	10°			
S20R-SSSCL09	S20R-SSSCR09	26	20	13.5	200	40	19	8°		M4×10	
S25S-SSSCL09	S25S-SSSCR09	31	25	16	250	40	24	6°			
S32T-SSSCL09	S32T-SSSCR09	38	32	19.5	300	45	30	4°			

SSK□R/L

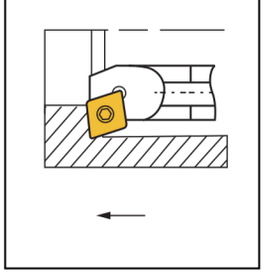

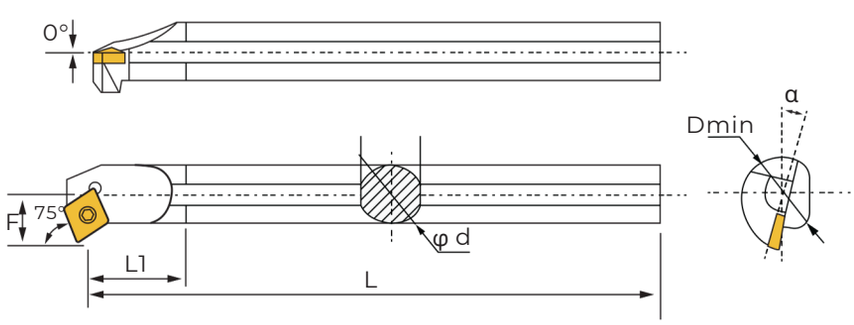

型号 Order Number		尺寸 Size (mm)							刀片 I nse rt	螺钉 S cre w	扳手 Wrench
左刀/ Le ft	右刀/Right	φ Dmin	φ d	F	L	L1	H	α°			
S 12M- S S KCL09	S 12M- S S KCR 09	16	12	8.5	150	30	10	12°	S C:09T 3	M4×8	T15
S 16Q- S S KCL09	S 16Q- S S KCR 09	20	16	10.5	160	30	15	10°			
S 20R - S S KCL09	S20R-SSKCR09	24	20	12.5	200	40	19	8°		M4×10	
S25S-SSKCL09	S25S-SSKCR09	30	25	15	280	40	24	6°			

Internal Turning Tool Holder

SCLCR/L

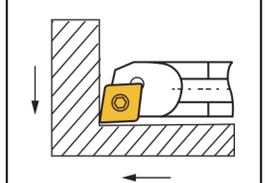

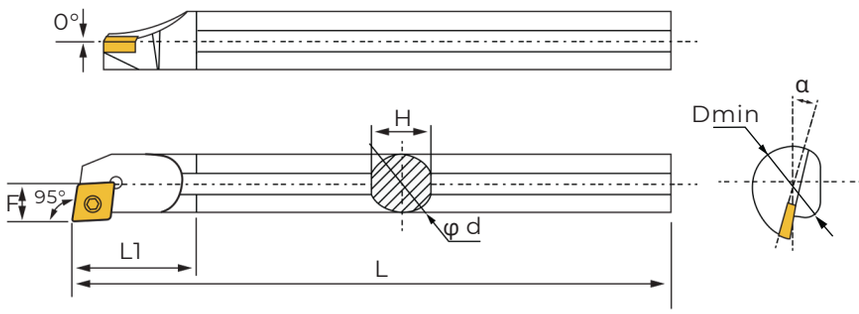

型号 Order Number		尺寸 Size (mm)							刀片 I nse rt	螺钉 S cre w	扳手 Wrench
左刀/ Le ft	右刀/Right	φ Dmin	φ d	F	L	L1	H	α°			
S 70K- S CLCL06	S 70K- S CLCR 06	9	7	4.9	125	14	6	15	CC:0602	M2.5×5	T8
S 08K- S CLCL06	S 08K- S CLCR 06	10	8	5	125	14	7	°	CC:0602	M2.5×6	T8
S 10K- S CLCL06	S 10K- S CLCR 06	12	10	6	125	14	9	15			
S 12M- S CLCL06	S 12M- S CLCR 06	16	12	9	150	25	11	°10°			
S 16Q- S CLCL06	S 16Q- S CLCR 06	20	16	11	180	32	15	18°			
S 12M- S CLCL09	S 12M- S CLCR 09	16	12	9	150	25	11	°10°	CC:09T3	M4×8	T15
S 16Q- S CLCL09	S 16Q- S CLCR 09	20	16	11	180	32.5	15	12°			
S 20R - S CLCL09	S 20R - S CLCR 09	25	20	13	200	38	18	8°			
S 25S - S CLCL09	S 25S - S CLCR 09	32	25	17	250	45	23	6°			
S 25S - S CLCL12	S 25S - S CLCR 12	32	25	17	250	45	23	6°	CC:1204	M5×12	T20
S 32T - S CLCL12	S 32T - S CLCR 12	40	32	22	300	50	30	10°			
S 40T - S CLCL12	S 40T - S CLCR 12	50	40	27	300	60	37	8°			

Internal Turning Tool Holder

SCZCR/L

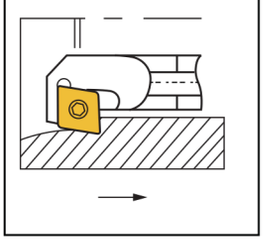

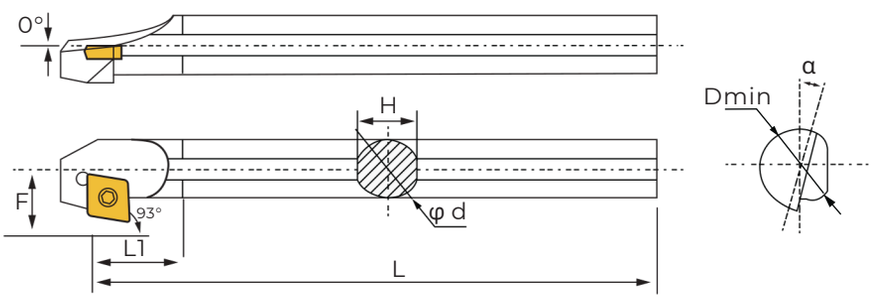

型号 Order Number		尺寸 Size (mm)							刀片 I nse rt	螺钉 S cre w	扳手 Wrench
左刀/ Le ft	右刀/Right	φ Dmin	φ d	F	L	L1	H	α°			
S 08K- S CZ CL06	S 08K- S CZ CR 06	12	8	6.5	125	25	7	13°	CC:0602	M2.5×6	T8
S 10K- S CZ CL06	S 10K- S CZ CR 06	14	10	7.5	125	27	9	12°			
S 12M- S CZ CL06	S 12M- S CZ CR 06	16	12	8.5	150	30	11	10°			
S 16Q- S CZ CL06	S 16Q- S CZ CR 06	20	16	10.5	180	35	15	8°			
S 16Q- S CZ CL09	S 16Q- S CZ CR 09	21	16	11.5	180	35	15	10°	CC:09T3	M4×8	T15
S 20R - S CZ CL09	S20R-SCZCR09	25	20	13.5	200	40	19	8°			
S 25S - S CZ CL09	S25S-SCZCR09	32	25	15	250	42	24	6°			

SCKCR/L

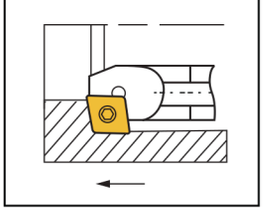

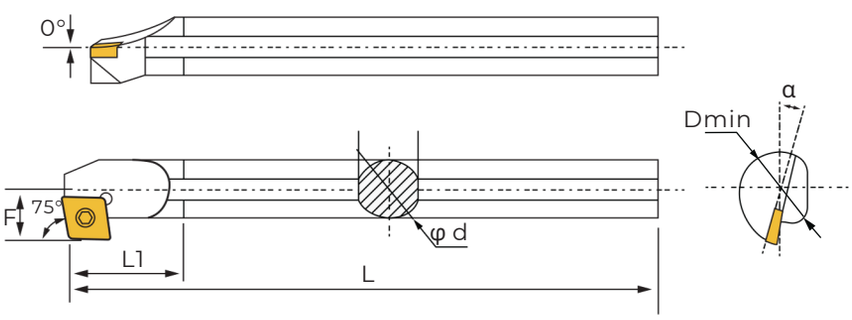

型号 Order Number		尺寸 Size (mm)							刀片 I nse rt	螺钉 S cre w	扳手 Wrench
左刀/ Le ft	右刀/Right	φ Dmin	φ d	F	L	L1	H	α°			
S 08K- S CKCL06	S 08K- S CKCR 06	10.5	8	5.5	125	20	7	13°	CC:0602	M2.5×6	T8
S 10K- S CKCL06	S 10K- S CKCR 06	13.5	10	6	125	22	9	12°			
S 12M- S CKCL06	S 12M- S CKCR 06	16	12	7	150	23	11	10°			
S 12M- S CKCL09	S 12M- S CKCR 09	14	12	8	150	30	11	12°	CC:09T3	M4×8	T15
S 14N- S CKCL09	S 14N- S CKCR 09	15	14	8	160	30	13	10°			
S 16Q- S CKCL09	S 16Q- S CKCR 09	20	16	9.5	180	30	15	10°			
S 20R - S CKCL09	S 20R - S CKCR 09	25	20	11.5	200	35	19	8°			
S 25S - S CKCL09	S 25S - S CKCR 09	31	25	14	280	40	24	6°			

Internal Turning Tool Holder

SDUCR/L

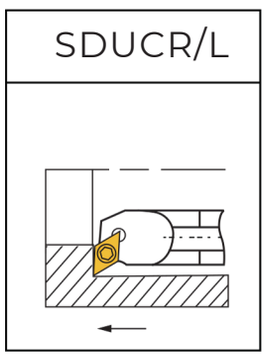

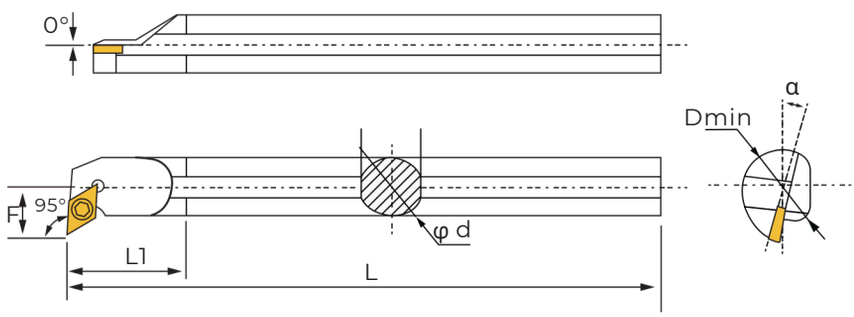

型号 Order Number		尺寸 Size (mm)							刀片 I nse rt	螺钉 S cre w	扳手 Wrench
左刀/ Le ft	右刀/Right	φ Dmin	φ d	F	L	L1	H	α°			
S 10K- S DUCL07	S 10K- S DUCR 07	15	10	8	125	25	9	10°	DC:0702	M2.5×6	T8
S 12M- S DUCL07	S 12M- S DUCR 07	17	12	9	150	28	11	8°			
S 16Q- S DUCL07	S 16Q- S DUCR 07	22	16	11	180	30	15	6°			
S 16Q- S DUCL11	S 16Q- S DUCR 11	22	16	11	180	30	19	6°	DC:11T3	M4×10	T15
S 20R - S DUCL11	S 20R - S DUCR 11	32	20	16	200	40	24	6°			
S 25S - S DUCL11	S 25S - S DUCR 11	39	25	20	250	40	30	4°			
S 32T - S DUCL11	S 32T - S DUCR 11	50	32	24	300	45	38	4°			

SDQCR/L

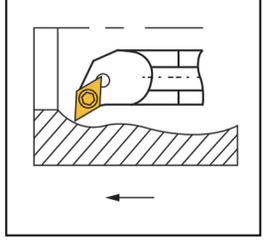

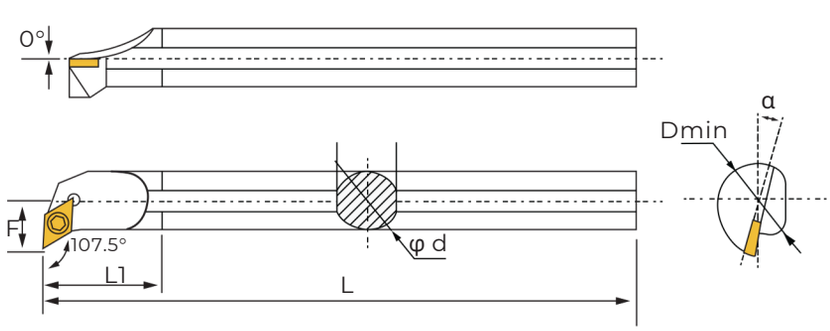

型号 Order Number		尺寸 Size (mm)							刀片 I nse rt	螺钉 S cre w	扳手 Wrench
左刀/ Le ft	右刀/Right	φ Dmin	φ d	F	L	L1	H	α°			
S 10K- S DQCL07	S 10K- S DQCR 07	13	10	7	125	23	9	10°	DC:0702	M2.5×6	T8
S 12M- S DQCL07	S 12M- S DQCR 07	16	12	9	150	30	11	8°			
S 16Q- S DQCL07	S 16Q- S DQCR 07	20	16	10.5	180	30	15	6°			
S 20R - S DQCL11	S 20R - S DQCR 11	25	20	13	200	39	19	6°	DC:11T3	M4×10	T15
S 25S - S DQCL11	S 25S - S DQCR 11	32	25	15	250	40	24	4°			
S 32T - S DQCL11	S 32T - S DQCR 11	39	32	20	300	43	30	4°			

Internal Turning Tool Holder

SDZ▫R/L

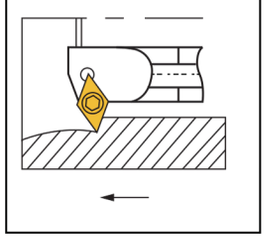

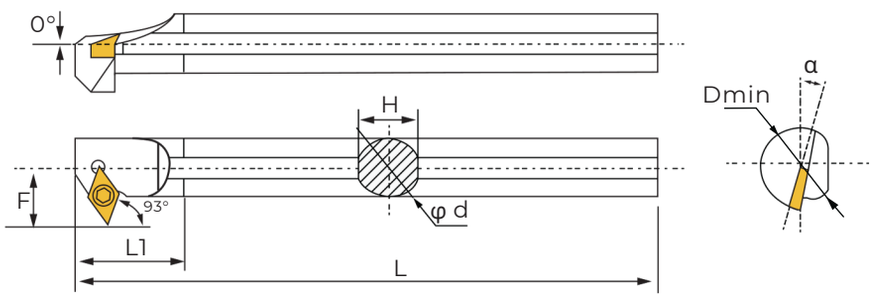

型号 Order Number		尺寸 Size (mm)							刀片 I nse rt	螺钉 S cre w	扳手 Wrench
左刀/ Le ft	右刀/Right	φ Dmin	φ d	F	L	L1	H	α°			
S 10K- S DZ CL07	S 10K- S DZ CR 07	15	10	8.5	125	25	9	12°	DC:0702	M2.5×6	T8
S 12M- S DZ CL07	S 12M- S DZ CR 07	18	12	9.5	150	30	11	10°			
S 16Q- S DZ CL07	S 16Q- S DZ CR 07	24	16	11.5	180	30	15	8°			
S 20R - S DZ CL11	S20R-SDZCR11	28	20	14.5	200	40	19	8°	DC:11T3	M4×10	T15
S 25S - S DZ CL11	S25S-SDZCR11	34	25	17	250	45	24	6°			
S 32T - S DZ CL11	S32T-SDZCR11	38	32	20.5	300	50	30	4°			

SDWCR/L

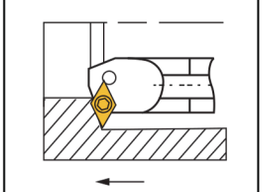

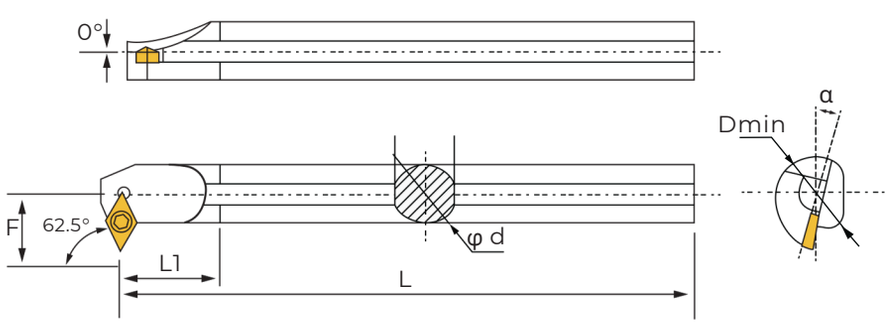

型号 Order Number		尺寸 Size (mm)							刀片 I nse rt	螺钉 S cre w	扳手 Wrench
左刀/ Le ft	右刀/Right	φ Dmin	φ d	F	L	L1	H	α°			
S 12M- S DW CL07	S 12M- S DW CR 07	19	12	10.5	150	28	11	10°	DC:0702	M2.5×6	T8
S 16Q- S DW CL07 S	S 16Q- S DW CR 07	23	16	12.5	180	30	15	8°			
20R - S DW CL07 S	S20R-SDWCR07	27	20	14.5	200	30	19	6°			
20R - S DW CL11	S20R-SDWCR11	25	20	14.5	200	40	19	6°	DC:11T3	M4×10	T15
S25S-SDWCL11	S25S-SDWCR11	32	25	17	250	45	24	4°			
S32T-SDWCL11	S32T-SDWCR11	40	32	20	300	50	30	2°			

Internal Turning Tool Holder

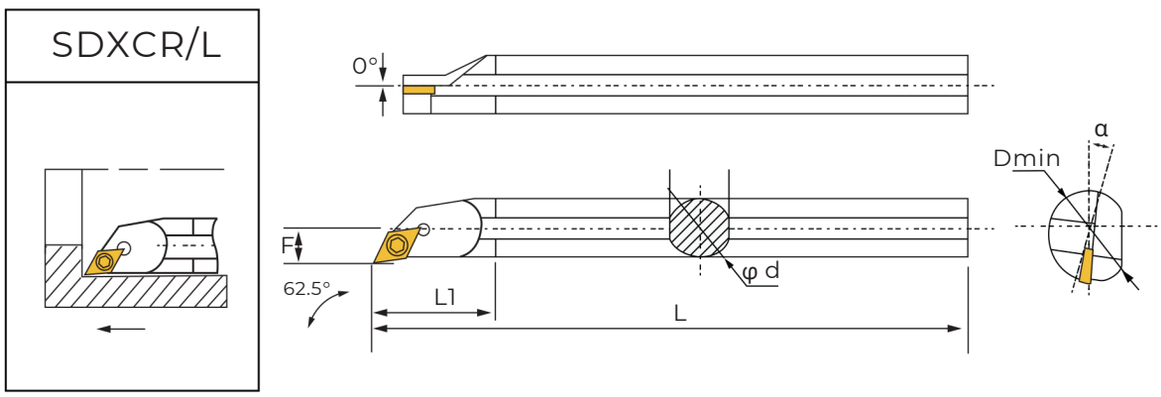

型号 Order Number		尺寸 Size (mm)							刀片 I nse rt	螺钉 Screw	扳手 Wrench
左刀/ Le ft	右刀/Right	φ Dmin	φ d	F	L	L1	H	α°			
S 08K- S DX CL07	S 08K- S DX CR 07	10	8	125	20	7	5.5	12°	DC:0702	M2.5×6	T8
S 10K- S DX CL07	S 10K- S DX CR 07	13	10	125	25	9	7	10°			
S 12M- S DX CL07	S 12M- S DX CR 07	16	12	150	30	11	8.5	8°			
S 16Q- S DX CL07	S 16Q- S DX CR 07	20	16	180	30	15	11	6°			
S 20L- S DX CL11	S20R-SDXCR11	25	20	200	40	19	13	6°	DC:11T3	M4×10	T15
S 25S - S DX CL11	S25S-SDXCR11	32	25	250	40	24	17	4°			

Threading Tool Holder Identification System

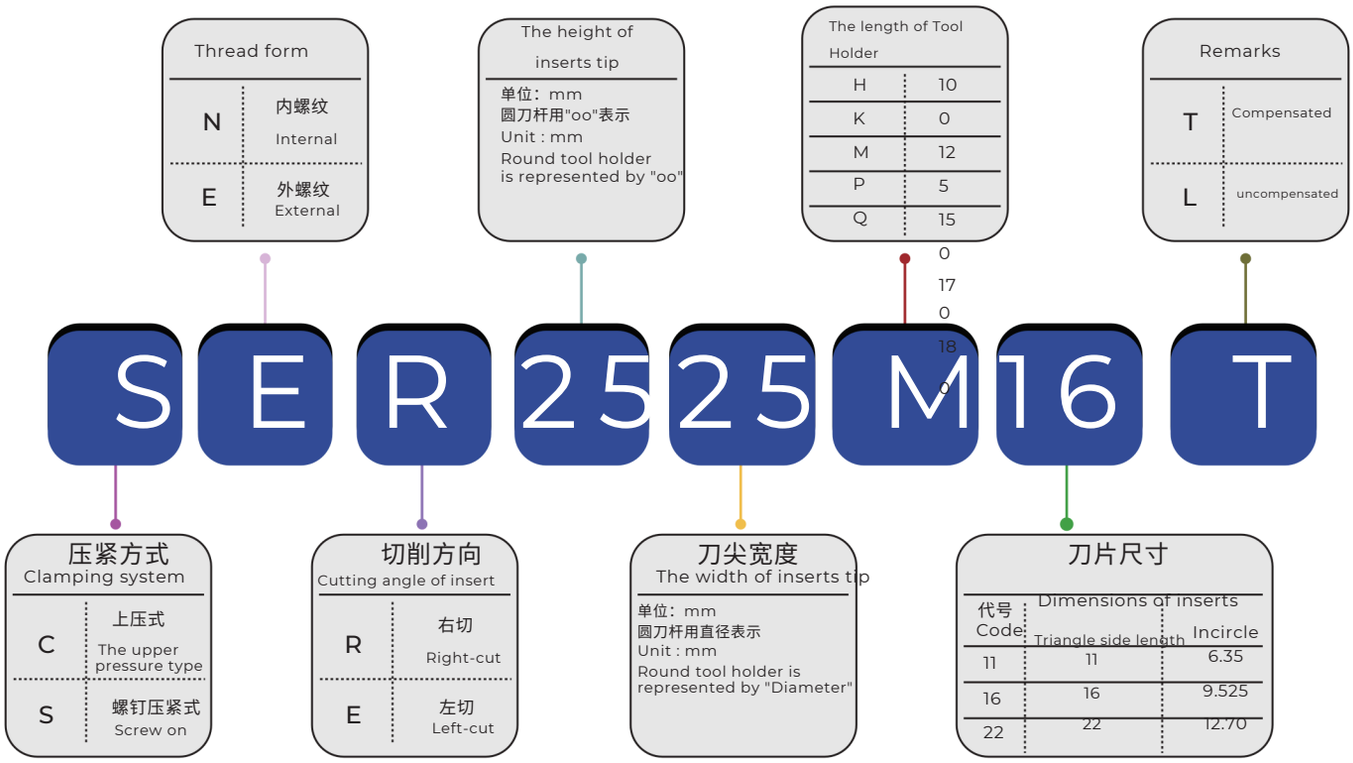

Threading Insert Identification System

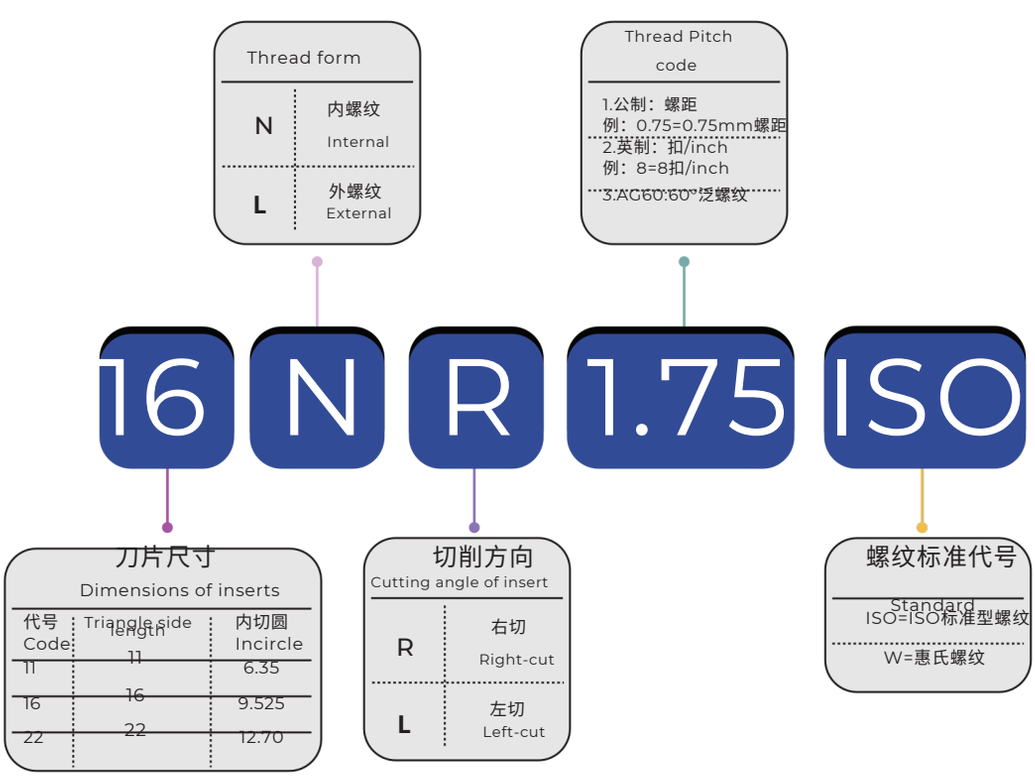

Threading Tool Holder

CER/L

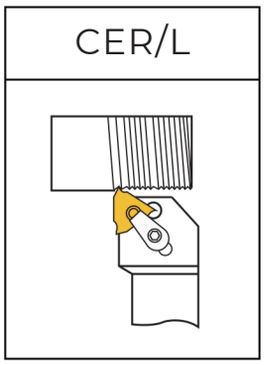

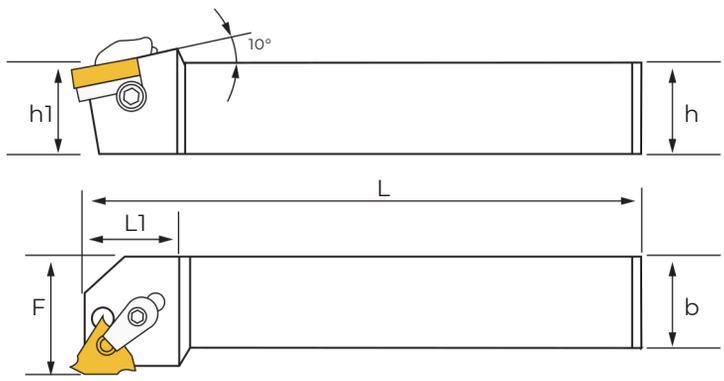



型号 Order Number		尺寸 Size (mm)						刀片 I nse rt	刀垫 Shi m	螺钉 Serew	压板 Cla m p	双头螺栓 S cre w	扳手 Wrench
左刀/ Le ft	右刀/Right	h	b	L	L1	h1	F						
CEL1616H16	CER1616H16	16	16	100	20	16	20	16ER/L	STM1603R/L	M3.5×12	HL1808	ML0620	T15 L3
CEL2020K16	CER2020K16	20	20	125	22	20	25						
CEL2525M16	CER2525M16	25	25	150	22	25	32						
CEL3225P16	CER3225P16	32	32	170	25	32	32						
CEL2525M22	CER2525M22	25	25	150	26	25	32	22ER/L	STM22T3R/L	M4.5×14	HL1808	ML0620	T15 L3
CEL3225P22	CER3225P22	32	32	170	28	32	32						

CT TR/L

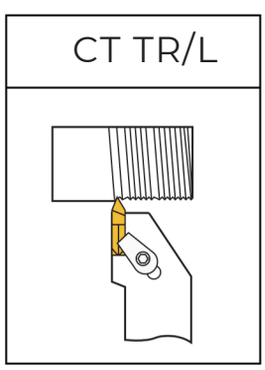

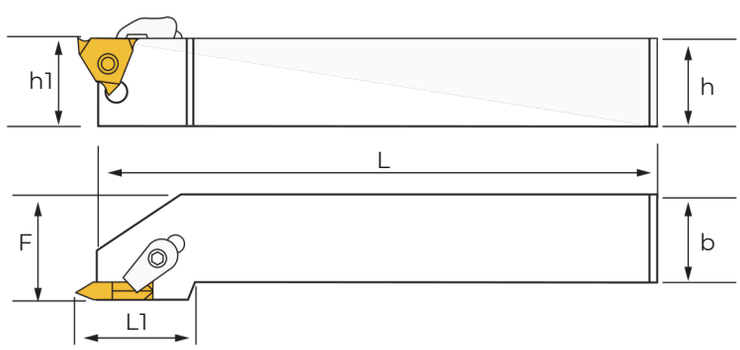



型号 Order Number		尺寸 Size (mm)						刀片 I nse rt	螺钉 Serew	压板 Cla m p	双头螺栓 S cre w	扳手 Wrench
左刀/ Le ft	右刀/Right	h	b	L	L1	h1	F					
CTTL1010F16	CTTR1010F16	10	10	90	20	10	12	TT32R/L	M4×10	-	-	T15 L2.5
CTTL1212H16	CTTR1212H16	12	12	100	20	12	16					
CTTL1616H16	CTTR1616H16	16	16	100	20	16	20			HL1808	ML0520	
CTTL2020K16	CTTR2020K16	20	20	125	22	20	25					
CTTL2020K22	CTTR2020K22	20	125	28	20	20	25	TT43R/L	M5×12			
CTTL2525M22	CTTR2525M22	25	25	150	30	25	32					
CTTL3232P22	CTTR3232P22	32	32	170	30	32	40					

Threading Tool Holder

10°

SER/L

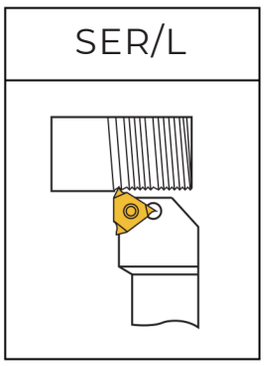

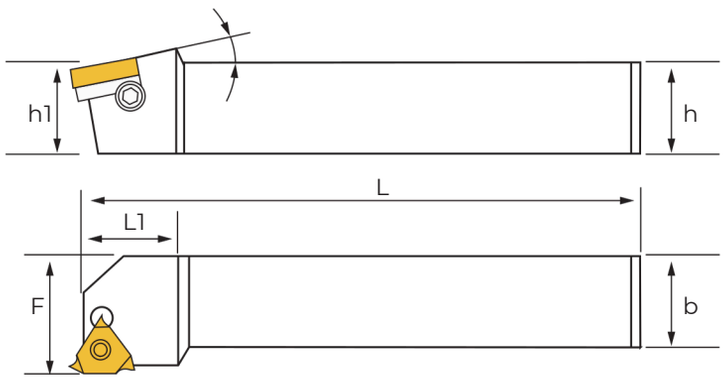

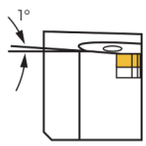

型号 Order Number		尺寸 Size (mm)						刀片 I nse rt	刀垫 Shi m	螺钉 S cre w	压板 Cla m p	侧螺钉 Serew	扳手 Wrench
左刀/ Le ft	右刀/Right	h	b	L	L1	h1	F						
SEL1010H11	SER1010H11	10	10	100	16	10	12	11ER/L	-	M2.5×6	-	-	T8
SEL1212H11	SER1212H11	12	12	100	16	12	16						
SEL1212H16	SER1212H16	12	12	100	20	12	18	16ER/L	STM1603R/L	M3.5×12	-	M3×8C	T15
SEL1616H16	SER1616H16	16	16	100	20	16	20						
SEL2020K16	SER2020K16	20	20	125	22	20	25						
SEL2525M16	SER2525M16	25	25	150	22	25	32						
SEL3225P16	SER3225P16	22	32	170	25	32	32						
SEL2525M22	SER2525M22	25	25	150	25	25	32	22ER/L	STM22T3R/L	M4.5×12	-	M3×8C	T15 T20
SEL3225P22	SER3225P22	32	32	170	28	32	32						

B-SER/L

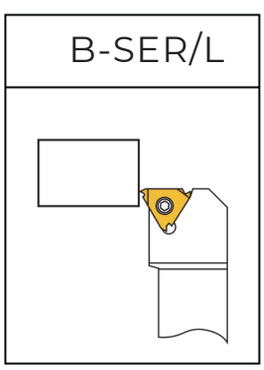

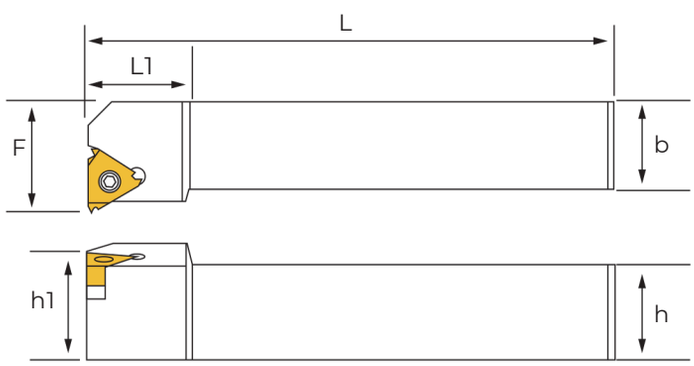

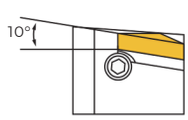

型号 Order Number		尺寸 Size (mm)						刀片 I nse rt	刀垫 Shi m	螺钉 S cre w	侧螺钉 S cre w	扳手 Wrench
左刀/ Le ft	右刀/Right	h	b	L	L1	h1	F					
B-SEL1212H16	B-SER1212H16	12	12	100	20	12	18	16ER/L	STM1603R STM1603L	M3.5×12	M3×8C	T15
B-SEL1616H16	B-SER1616H16	16	16	100	20	16	20					
B-SEL2020K16	B-SER2020K16	20	20	125	22	20	25					
B-SEL2525M16	B-SER2525M16	25	25	150	22	25	32					

Threading Tool Holder

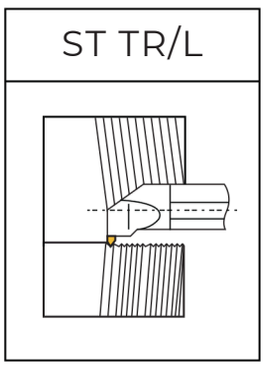

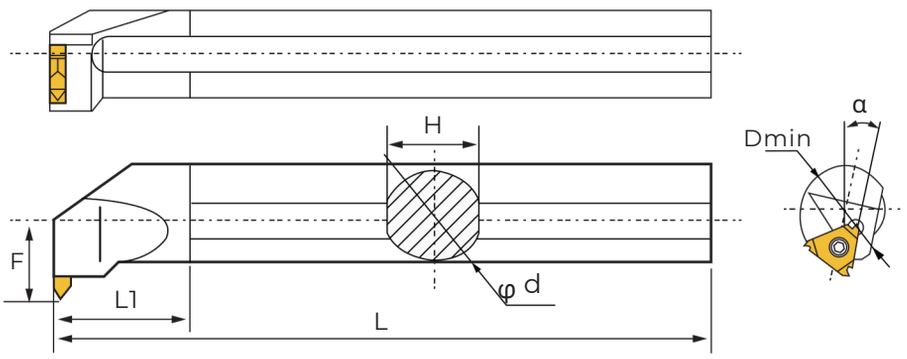

型号 Order Number		尺寸 Size (mm)							刀片 I nse rt	螺钉 S cre w	扳手 Wrench
左刀/ Le ft	右刀/Right	φ Dmin	φ d	F	L	L1	H	α°			
STTL0020Q16	STTR0020Q16	25	20	14.5	200	26	18.4	15°	TT32R/L	M4×10	T15
STTL0025S16	STTR0025S16	30	25	17.5	250	30	23.4				
STTL0032T16	STTR0032T16	38	32	22	300	35	30				
STTL0025S22	STTR0025S22	31	25	18	250	32	23.4		TT43R/L	M5×12	T20
STTL0032T22	STTR0032T22	39	32	22.5	300	38	30				
HSTTL0020R16	HSTTR0020R16	25	20	14.5	200	26	18.4		TT32R/L	M4×10	T15
HSTTL0032T16	HSTTR0032T16	30	25	17.5	250	30	23.4				
HSTTL0025S16	HSTTR0025S16	38	32	22	300	35	30				
HSTTL0025S22	HSTTR0025S22	31	25	18	250	32	23.4		TT43R/L	M5×12	T20
HSTTL0032T22	HSTTR0032T22	39	32	22.5	300	38	30				

Threading Tool Holder

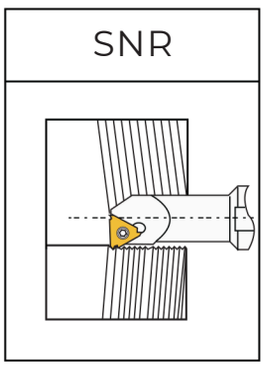

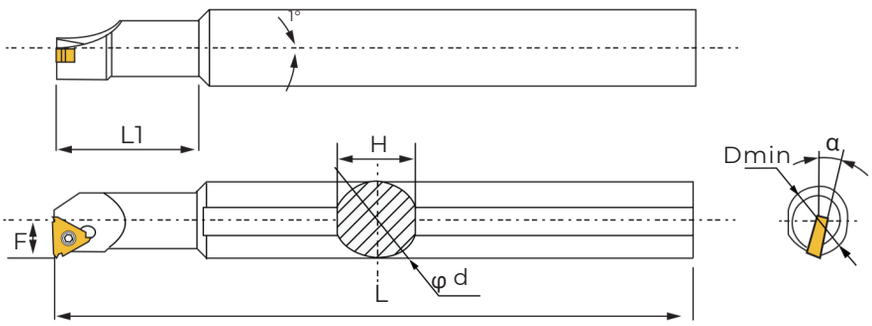

型号 Order Number		尺寸 Size (mm)							刀片 I nse rt	螺钉 S cre w	扳手 Wrench
左刀/ Le ft	右刀/Right	φ Dmin	φ d	F	L	L1	H	α°			
SNL0010K11-A16	SNR0010K11-A16	12	10	7.2	125	28	14.6	15°	11NR/L	M2.5×6	T8
SNL0012M11-A16	SNR0012M11-A16	15	12	8.7	150	33	14.6				
SNL0013N16-A16	SNR0013N16-A16	17	16	10	160	33	14.6		16NR/L	M3.5×9	T15
HSNL0010K11-A16	HSNR0010K11-A16	12	10	7.2	125	28	14.6		11NR/L	M2.5×6	T8
HSNL0012M11-A16	HSNR0012M11-A16	15	12	8.7	150	33	14.6				
HSNL0013M16-A16	HSNR0013M16-A16	17	16	10	160	33	14.6		16NR/L	M3.5×9	T15

Threading Tool Holder

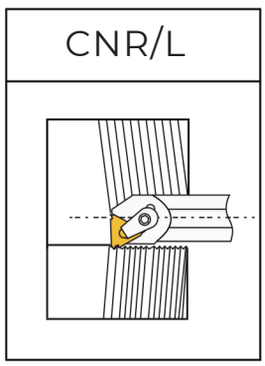

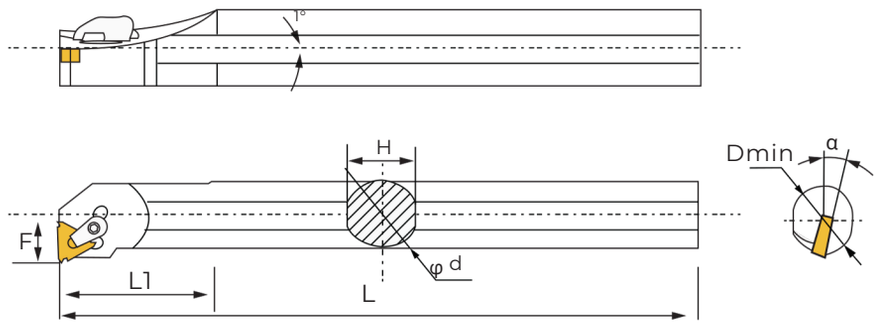

型号 Order Number		尺寸 Size (mm)							刀片 I nse rt	刀垫 Shi m	螺钉 Serew	压板 Cla m p	双头螺栓 S cre w	扳手 Wrench
左刀/ Le ft	右刀/Right	φ Dmin	φ d	F	L	L1	H	α°						
CNL0025S16	CNR0025S16	29	25	16	250	32	23.4	15°	16NR/L	STM1603R/L	M3.5×12	HL1808	ML620	T15 L3
CNL0032T16	CNR0032T16	36	32	19.5	300	38	30						ML620	
CNL0040T16	CNR0040T16	44	40	23.5	30	42	38							
CNL0050U16	CNR0050U1	54	50	28.5	350	50	48							
CNL0025S22	6	31	25	18	250	32	23.4		22NR/L	STM22T3R/L	M4.5×14		ML620	T20 L3
CNL0032T22	CNR0025S22	38	32	21.5	300	38	30						ML620	
CNL0040T22	CNR0032T22	45	40	25.5	300	42	38							
CNL0050U22	CNR0040T22	56	50	30.5	350	50	45							
HCNL0025S16	CNR0050U2 HCNR0025S16	29	25	16	250	32	23.4		16NR/L	STM1603R/L	M3.5×12		ML620	T15 L3
HCNL0032T16	2 HCNR0032T16	36	32	19.5	300	38	30						ML620	
HCNL0040T16	HCNR0040T16	44	40	23.5	300	42	38							
HCNL0050U16	HCNR0050U16	54	50	28.5	350	50	48							
HCNL0025S22	HCNR0025S22	31	25	18	250	32	23.4		22NR/L	STM22T3R/L	M4.5×14		ML620	T20 L3
HCNL0032T22	HCNR0032T22	38	32	21.5	300	38	30						ML620	
HCNL0040T22	HCNR0040T22	46	40	25.5	300	42	38							
HCNL0050U22	HCNR0050U22	56	50	30.5	350	50	48							

Threading Tool Holder

SNR/L

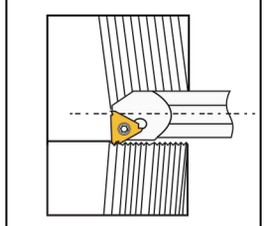

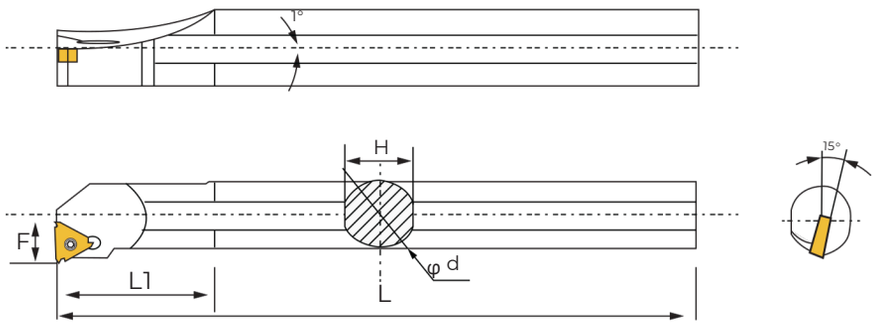

型号 Order Number		尺寸 Size (mm)							刀片 I nse rt	刀垫 Shi m	螺钉 S cre w	侧螺钉 S cre w	扳手 Wrench
左刀/ Le ft	右刀/Right	φ Dmin	φ d	F	L	L1	H	α°					
SNL0010K11	SNR0010K11	12	10	7.2	125	18	9	15°	11NR/L	-	M2.5×6	-	T8
SNL0012K11	SNR0012K11	15	12	8.7	125	18	11						
SNL0016M16	SNR0016M16	19	16	11.5	150	25	14.6		16NR/L	-	M3.5×9		T15
SNL0020Q16	SNR0020Q16	24	20	13.5	180	28	18.4						
SNL0025R16	SNR0025R16	29	25	16	200	32	23.4			STM1603R/L	M3.5×12	M3×8C	T15
SNL0032S16	SNR0032S16	36	32	19.5	250	38	30						
SNL0040T16	SNR0040T16	44	40	23.5	300	42	38						
SNL0050U16	SNR0050U16	54	50	28.5	350	50	48						
SNL0025S22	SNR0025S22	31	25	18.9	250	32	23.4		22NR/L	STM22T3R/L	M4.5×14		T20 T15
SNL0032T22	SNR0032T22	38	32	21.5	300	38	30						
SNL0040T22	SNR0040T22	46	40	25.5	300	42	38						
SNL0050U22	SNR0050U22	56	50	30.5	350	50	48						
HSNL0010K10	HSNR0010K10	12	10	7.2	125	18	9		11NR/L	-	M2.5×6	-	T8
HSNL0012M11	HSNR0012M11	15	12	8.7	150	18	11						
HSNL0016Q16	HSNR0016Q16	19	16	11.5	180	25	14.6		16NR/L	-	M3.5×9		T15
HSNL0020R16	HSNR0020R16	24	20	13.5	200	28	18.4						
HSNL0025S16	HSNR0025S16	29	25	16	250	32	23.4			STM1603R/L	M3.5×12	M3×8C	T15
HSNL0032T16	HSNR0032T16	36	32	19.5	300	38	30						
HSNL0040T16	HSNR0040T16	44	40	23.5	300	42	38						
HSNL0050U16	HSNR0050U16	54	50	28.5	350	50	48						
HSNL0025S22	HSNR0025S22	31	25	18	250	32	23.4		22NR/L	STM22T3R/L	M4.5×14		T20 T15
HSNL0032T22	HSNR0032T22	38	32	21.5	300	38	30						
HSNL0040T22	HSNR0040T22	46	40	25.5	300	42	38						
HSNL0050U22	HSNR0050U22	56	50	30.5	350	50	48						

GROOVING TOOL HOLDER



Grooving Tool Holder

B97

Grooving Tool Holder

MGEUR/L

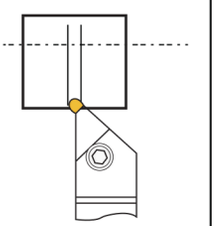

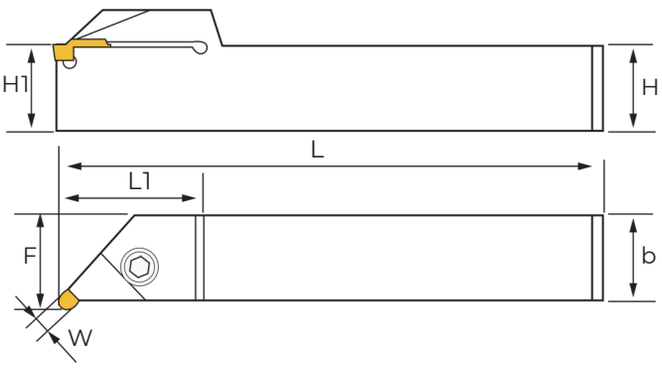

型号 Order Number		尺寸 Size (mm)							刀片 I nse rt	螺钉 S cre w	扳手 Wrench
左刀/ Le ft	右刀/Right	H	b	L	L1	H1	F	W			
MGEUL1616-2	MGEUR1616-2	16	16	100	26	16	18	2	MRMN200-M	M5×20	L4
MGEUL1616-3	MGEUR1616-3	20	20	100	30	16	19	3	MRMN300-M		
MGEUL2020-3	MGEUR2020-3	20	20	125	30	20	23	3			
MGEUL2525-3	MGEUR2525-3	25	25	150	30	25	28	3			
MGEUL3232-3	MGEUR3232-3	32	32	170	30	32	35	3		M5×20	L4
MGEUL2020-4	MGEUR2020-4	20	20	125	30	20	24	3	MRMN400-M		
MGEUL2525-4	MGEUR2525-4	25	25	150	30	25	29	3			
MGEUL3232-4	MGEUR3232-4	32	32	170	30	32	36	3		M6×20	L5
MGEUL2020-5	MGEUR2020-5	20	20	125	30	20	25	4	MRMN500-M	M5×20	L4
MGEUL2525-5	MGEUR2525-5	25	25	150	30	25	30	4			
MGEUL3232-5	MGEUR3232-5	32	32	170	30	32	37	4		M6×20	L5
MGEUL2525-6	MGEUR2525-6	25	25	150	30	25	31	4	MRMN600-M		
MGEUL3232-6	MGEUR3232-6	32	32	170	30	32	38	4			
MGEUL2525-8	MGEUR2525-8	25	25	150	30	25	33	5	MRMN800-M		
MGEUL3232-8	MGEUR3232-8	32	32	170	30	32	40	5			

Grooving Tool Holder

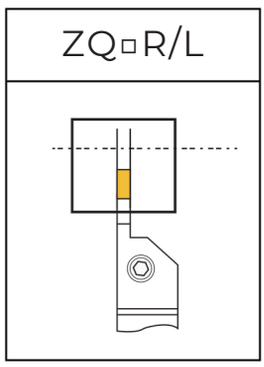

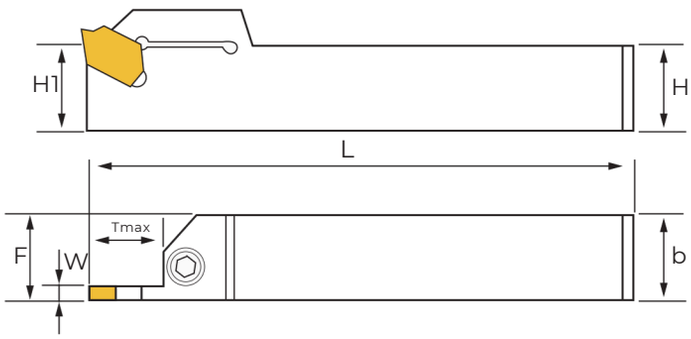

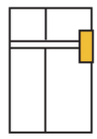

型号 Order Number		尺寸 Size (mm)							刀片 I nse rt	螺钉 S cre w	扳手 Wrench
左刀/ Le ft	右刀/Right	W	H	d	L	H1	F	Tmax	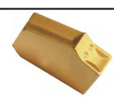		
ZQ1616L-03	ZQ1616R-03	3.125	16	16	100	16	16.4	18	ZQMX3N11-1E	M5×20	L4
ZQ2020L-03	ZQ2020R-03	3.125	20	20	125	20	20.4	20		M5×20	L4
ZQ2525L-03	ZQ2525R-03	3.125	25	25	150	25	25.4	20			
ZQ3225L-03	ZQ3225R-03	3.125	25	32	170	32	25.4	25			
ZQ1616L-04	ZQ1616R-04	4.125	16	16	100	16	16.4	18	ZQMX4N11-1E	M5×20	L4
ZQ2020L-04	ZQ2020R-04	4.125	20	20	125	20	20.4	20		M5×20	L4
ZQ2525L-04	ZQ2525R-04	4.125	25	25	150	25	25.4	20			
ZQ3225L-04	ZQ3225R-04	4.125	32	32	170	32	25.4	25			
ZQ2525L-05	ZQ2525R-05	5.125	25	25	150	25	25.5	25	ZQX5N11-1E	M5×20	L4
ZQ3232L-05	ZQ3232R-05	5.125	32	32	170	32	32.5	25			
ZQ2525L-06	ZQ2525R-06	6.4	25	25	150	25	25.5	32	ZQX6N11-1E		
ZQ3232L-06	ZQ3232R-06	6.4	32	32	170	32	32.5	32			

Grooving Tool Holder

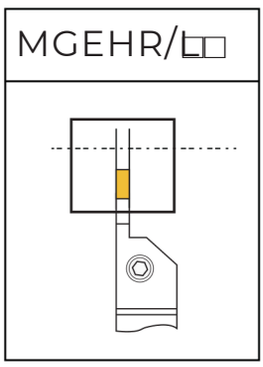

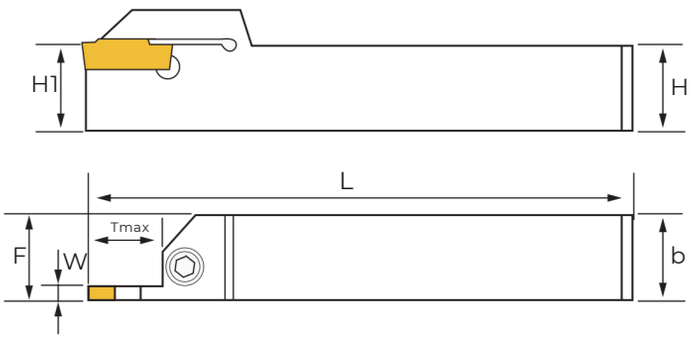

型号 Order Number		尺寸 Size (mm)							刀片 I nse rt	螺钉 S cre w	扳手 Wrench
左刀/ Le ft	右刀/Right	W	H	b	L	H1	F	Tmax			
MGEHL1616-2	MGE HR 1616- 2	2	16	16	100	16	16	16	MGMN200-G	M5×16	L
MGEHL2020-2	MGE HR 2020- 2	2	20	20	125	20	20	16		M5×16	4
MGEHL1616-3	MGE HR 1616- 3	3	16	16	100	16	16	20	MGMN300-M MGGN300-J MRMN300-M	M5×16	L
MGEHL2020-3	MGE HR 2020- 3	3	20	20	125	20	20	20		M5×20	5
MGEHL2525-3	MGE HR 2525- 3	3	25	25	150	25	25	20			L4
MGEHL3232-3	MGE HR 3232- 3	4	32	32	170	32	32	20			4
MGEHL1616-4	MGE HR 1616- 4	4	16	16	100	16	16	20	MGMN400-M MGGN400-J MRMN400-M	M5×20	L4
MGEHL2020-4	MGE HR 2020- 4	4	20	20	125	20	20	20		M5×20	L4
MGEHL2525-4	MGE HR 2525- 4	4	25	25	150	25	25	20			
MGEHL3232-4	MGE HR 3232- 4	4	32	32	170	32	32	20			
MGEHL2020-5	MGE HR 2020- 5	5	20	20	125	20	20	25	MGMN500-M MGGN500-J MRMN500-M	M5×20	L4
MGEHL2525-5	MGE HR 2525- 5	5	25	25	150	25	25	25			
MGEHL3232-5	MGE HR 3232- 5	5	32	32	170	32	32	25			
MGEHL2525-6	MGE HR 2525- 6	6	25	25	150	25	25	25	MGMN600-M MGGN600-J MRMN600-M	M6×20	L4
MGEHL3232-6	MGE HR 3232- 6	6	32	32	170	32	32	25			

Grooving Tool Holder

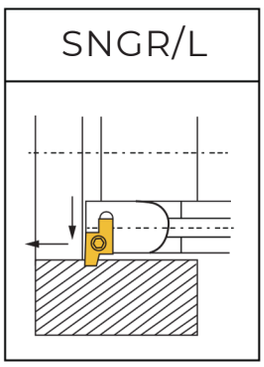

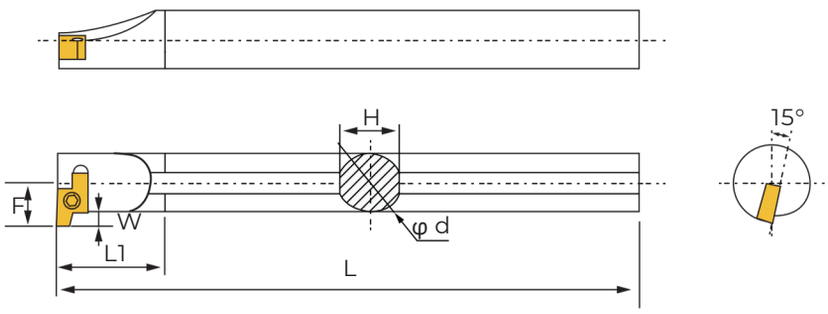

型号 Order Number		尺寸 Size (mm)						刀片 I nse rt	螺钉 S cre w	扳手 Wrench
左刀/ Le ft	右刀/Right	W	φ d	F	L1	L	H			
S08H-SNGL06	S08H-SNGR06	2	8	4.7	15	100	7	6GR / L	M5×16	L4
S08H-SNGL07	S08H-SNGR07	2	8	5.8	15	100	7	7GR / L	M5×16	L4
S10K-SNGL07	S 10K- S NGR 07	2	10	6.8	15	125	8			
S10K-SNGL08	S 10K- S NGR 08	3.5	10	7.6	20	125	8	8GR / L		
S12M-SNGL08	S12M-SNGR08	3.5	12	8.6	20	150	11			
S16Q-SNGL09	S16Q-SNGR09	3.5	16	11.5	20	180	14.8	9GR / L		
S20R-SNGL09	S20R-SNGR09	3.5	20	13.6	20	200	18.4			
H08H-SNGL06	H08H-SNGR06	2	8	4.7	15	100	7	6GR / L	M5×20	L4
H08H-SNGL07	H08H-SNGR07	2	8	5.8	15	100	7	7GR / L	M5×20	L4
H10K-SNGL07	H10K-SNGR07	2	10	6.8	15	125	8			
H10K-SNGL08	H10K-SNGR08	3.5	10	7.6	20	125	8	8GR / L		
H12M-SNGL08	H12M-SNGR08	3.5	12	8.6	20	150	11			
H16Q-SNGL09	H16Q-SNGR09	3.5	16	11.6	20	180	14.8	9GR / L		
H20R-SNGL09	H20R-SNGR09	3.5	20	13.6	20	200	18.4			

Grooving Tool Holder

MGIVR/L

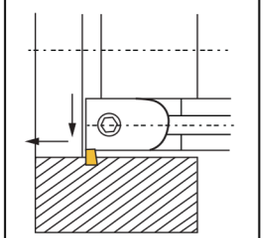

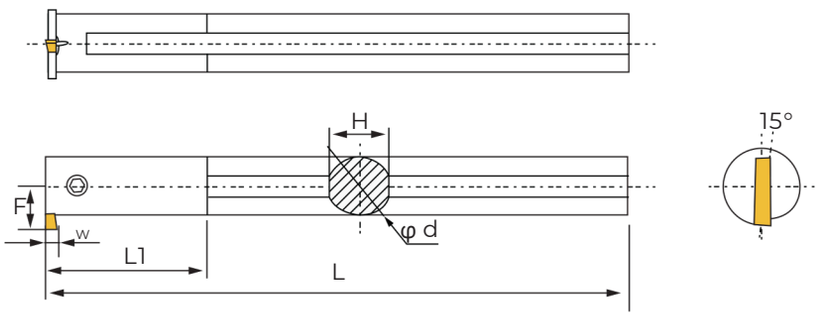

型号 Order Number		尺寸 Size (mm)						刀片 I nse rt	螺钉 S cre w	扳手 Wrench
左刀/ Le ft	右刀/Right	W	φ d	F	L1	L	H			
MGIVL2016-2	MGIVR2016-2	2	16	12.4	180	26	14.8	MGMN200	M4×15	L3
MGIVL2420-2	MGIVR2420-2	2	20	14	200	26	18.4			
MGIVL2925-2	MGIVR2925-2	2	25	17.25	250	26	23.4			
MGVIL2520-3	MGVIR2520-3	3	20	15.6	200	28	18.4	MGMN300 MRMN300	M4×15	L3
MGVIL3125-3	MGVIR3125-3	3	25	18.9	250	28	23.4		M5×20	L4
MGVIL3732-3	MGVIR3732-3	3	32	21.5	180	28	30			
MGVIL2520-4	MGVIR2520-4	4	20	15.6	200	32	18.4	MGMN400 MRMN400	M5×20	L4
MGVIL3125-4	MGVIR3125-4	4	25	18.9	250	32	23.4			
MGVIL3732-4	MGVIR3732-4	4	32	21.5	300	32	30			
MGVIL3125-5	MGVIR3125-5	5	25	19.4	250	40	23.4	MGMN500 MRMN500	M5×20	L4
MGVIL3732-5	MGVIR3732-5	5	32	21.5	300	40	30			
MGVIL3125-6	MGVIR3125-6	6	25	19.4	250	40	23.4	MGMN600 MRMN600	M6×25	L5
MGVIL3732-6	MGVIR3732-6	6	32	21.5	300	40	30			
MGVIL3732-8	MGVIR3732-8	8	32	23.5	300	40	30	MGMN800 MRMN800	M6×25	L5
MGVIL4540-8	MGVIR4540-8	8	40	27.2	350	40	38			
MGVIL2016-2-H	MGVIR2016-2-H	2	16	12.4	180	26	14.8	MGMN200	M4×15	L3
MGVIL2520-2-H	MGVIR2520-2-H	2	20	14	200	26	18.4			
MGVIL2925-2-H	MGVIR2925-2-H	2	25	17.25	250	26	23.4			
MGVIL2520-3-H	MGVIR2520-3-H	3	20	15.6	200	28	18.4	MGMN300 MRMN300	M4×15	L3
MGIVL3125-3-H	MGIVR3125-3-H	3	25	18.9	250	28	23.4		M5×20	L4
MGIVL3732-3-H	MGIVR3732-3-H	3	32	21.5	180	28	30			
MGIVL2520-4-H	MGIVR2520-4-H	4	20	15.6	200	32	18.4	MGMN400 MRMN400	M5×20	L4
MGVIL3125-4-H	MGVIR3125-4-H	4	25	18.9	250	32	23.4			
MGVIL3732-4-H	MGVIR3732-4-H	4	32	21.5	300	32	30			
MGVIL3125-5-H	MGVIR3125-5-H	5	25	19.4	250	40	23.4	MGMN500 MRMN500	M5×20	L4
MGVIL3732-5-H	MGVIR3732-5-H	5	32	21.5	300	40	30			
MGVIL3125-6-H	MGVIR3125-6-H	6	25	19.4	250	40	23.4	MGMN600 MRMN600	M6×25	L5
MGVIL3732-6-H	MGVIR3732-6-H	6	32	21.5	300	40	30			
MVGIL3732-8-H	MVGIR3732-8-H	8	32	23.5	300	40	30	MGMN800 MRMN800	M6×25	L5
MGVI L4540- 8- H	MGVIR4540-8-H	8	40	27.2	350	40	38			

Grooving Tool Holder

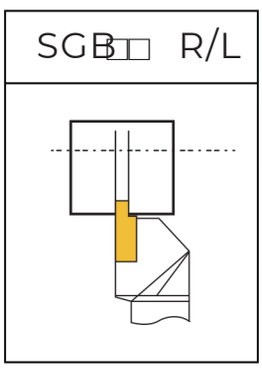

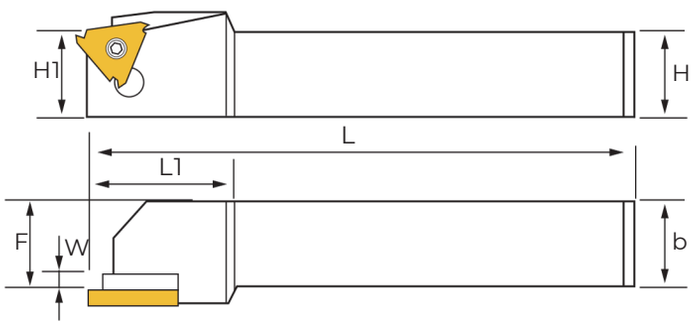

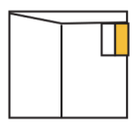





型号 Order Number		尺寸 Size (mm)							刀片 I nse rt	螺钉 S cre w	扳手 Wrench
左刀/ Le ft	右刀/Right	W	H	b	L	L1	H	F			
SGBL1616H16	SGBR1616H16	0.33-2.5	16	16	100	22	16	20	TGF32R/L	M4×10	T15
SGBL2020K16	SGBR2020K16	0.33-2.5	20	20	125	26	20	25			
S GBL2525M16	SGBR2525M16	0.33-2.5	25	25	150	26	25	32			
SGBL2020K22-1	SGBR2020K22-1	1.25-1.85	20	20	125	26	20	25	GBA43R/L125-185	M5×12	T20
SGBL2020K22-2	SGBR2020K22-2	2.0-2.8	20	20	125	26	20	25	GBA43R/L200-280		
SGBL2020K22-3	SGBR2020K22-3	3.0-4.5	20	20	125	26	20	25	GBA43R/L300-450		
SGBL2525M22-1	SGBR2525M22-1	1.25-1.85	25	25	150	26	25	32	GBA43R/L125-185		
SGBL2525M22-2	SGBR2525M22-2	2.0-2.8	25	25	150	26	25	32	GBA43R/L200-280		
SGBL2525M22-3	SGBR2525M22-3	3.0-4.5	25	25	150	26	25	32	GBA43R/L300-450		

Grooving Tool Holder

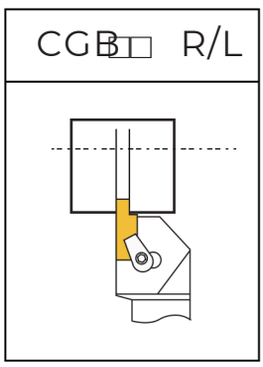

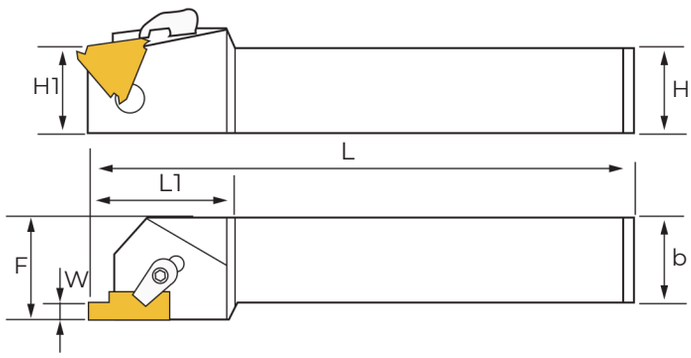

型号 Order Number		尺寸 Size (mm)							刀片 I nse rt	压板 Cla m p	双头螺栓 S cre w	扳手 Wrench
左刀/ Le ft	右刀/Right	W	H	b	L	L1	H	F				
CGBL1616H16	CGBR1616H16	0.5-2.5	16	16	100	22	16	20	TGF32R/L	HL1808	M3.5×10 ML0520	T15 L2.5
CGBL2020K16	CGBR2020K16	0.5-2.5	20	20	125	26	20	25				
CGBL2525M16	CGBR2525M16	0.5-2.5	25	25	150	26	25	32				
CGBL2020K22-1	CGBR2020K22-1	1.25-1.85	20	20	125	26	20	25	GBA43R/L125-185	HL1808	M5×12 ML0520	T20 L2.5
CGBL2020K22-2	CGBR2020K22-2	2.0-2.8	20	20	125	26	20	25	GBA43R/L200-280			
CGBL2020K22-3	CGBR2020K22-3	3.0-4.5	20	20	125	26	20	25	GBA43R/L300-450			
CGBL2525M22-1	CGBR2525M22-1	1.25-1.85	25	25	150	26	25	32	G4A3BR/L125-185			
CGBL2525M22-2	CGBR2525M22-2	2.0-2.8	25	25	150	26	25	32	GBA43R/L200-280			
CGBL2525M22-3	CGBR2525M22-3	3.0-4.5	25	25	150	26	25	32	GBA43R/L300-450			

Parting off Blade

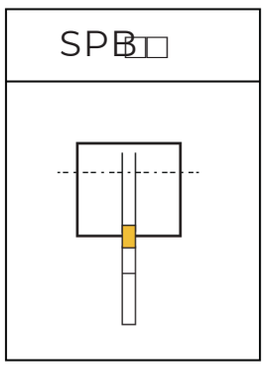

型号 Order Number	尺寸 Size (mm)					刀片 I nse rt
	W	b	H	L	L1	
SPB26-2	2	1.6	26	110	21	SP200 , 200R/L
SPB26-3	3	2.4	26	110	21	SP300 , 300R/L
SPB26-4	4	3.2	26	110	21	SP400 , 400R/L
SPB26-5	5	4.2	26	110	21	SP500 , 500R/L
SPB32-2	2	1.6	32	150	27	SP200 , 200R/L
SPB32-3	3	2.4	32	150	27	SP300 , 300R/L
SPB32-4	4	3.2	32	150	27	SP400 , 400R/L
SPB32-5	5	4.2	32	150	27	SP500 , 500R/L
SPB32-6	6	5.2	32	150	27	SP600 , 600R/L

P Type Tool Holder

PCBNR/L

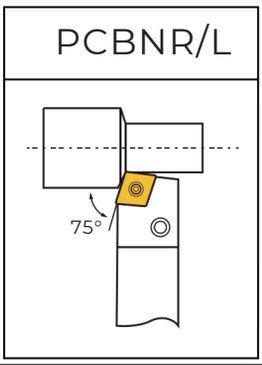

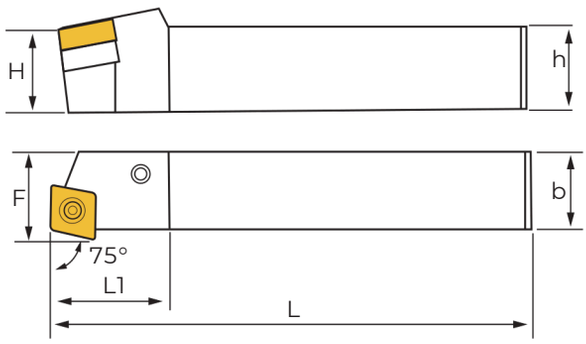



型号 Order Number		尺寸 Size (mm)						刀片 I nse rt	刀垫 Shi m	螺钉 S cre w	扳手 Wrench	杠杆 Lever	挡垫 Shim pin
左刀/ Le ft	右刀/Right	h	b	L	H	F	L1						
PCBNL2020K12	PCBNR2020K12	20	20	125	20	17	27	CN:1204	PC12318	VHX0821	S3	LV4	SP4
PCBNL2525M12	PCBNR2525M12	25	25	150	25	22	27						
PCBNL3232P12	PCBNR3232P12	32	32	170	32	27	27						
PCBNL2525M16	PCBNR2525M16	25	25	150	25	22	33	CN:1606	PC16476	VHX0825	S3	LV5	SP5
PCBNL3232P16	PCBNR3232P16	32	32	170	32	27	33						
PCBNL3232P19	PCBNR3232P19	32	32	170	32	27	38	CN:1906	PC19476	VHX1027	S4	LV6	SP6
PCBNL4040S19	PCBNR4040S19	40	40	250	40	35	38						
PCBNL4040S2507	PCBNR4040S2507	40	40	250	40	35	50	CN:2507	PC25634	VHX1236	S5	LV8	SP8
PCBNL4040S2509	PCBNR4040S2509	40	40	250	40	35	50	CN:2509	PC25476				

PCLNR/L

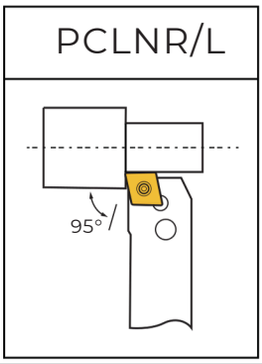

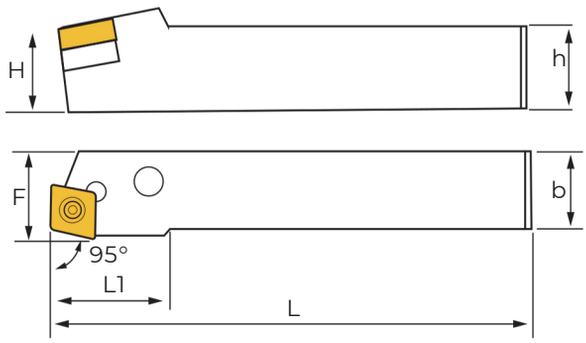



型号 Order Number		尺寸 Size (mm)						刀片 I nse rt	刀垫 Shi m	螺钉 S cre w	扳手 Wrench	杠杆 Lever	挡垫 Shim pin
左刀/ Le ft	右刀/Right	h	b	L	H	F	L1						
PCLNL1616H09	PCLNR1616H09	16	16	100	16	20	20	CN:0903	PC09318	VHX0613	S2.5	LV3	SP3
PCLNL2020K09	PCLNR2020K09	20	20	125	20	25	22						
PCLNL2525M09	PCLNR2525M09	25	25	150	25	32	22						
PCLNL2020K12	PCLNR2020K12	20	20	125	20	25	28	CN:1204	PC12318	VHX0821	S3	LV4	SP4
PCLNL2525M12	PCLNR2525M12	25	25	150	25	32	28						
PCLNL3232P12	PCLNR3232P12	32	32	170	32	40	28						
PCLNL2525M16	PCLNR2525M16	25	25	150	25	32	33	CN:1606	PC16476	VHX0825	S3	LV5	SP5
PCLNL3232P16	PCLNR3232P16	32	32	170	32	40	33						
PCLNL3232P19	PCLNR3232P19	32	32	170	32	40	38	CN:1906	PC19476	VHX1027	S4	LV6	SP6
PCLNL4040S19	PCLNR4040S19	40	40	250	40	50	38						
PCLNL4040S2507	PCLNR4040S2507	40	40	250	40	50	50	CN:2507	PC25634	VHX1236	S5	LV8	SP8
PCLNL4040S2509	PCLNR4040S2509	40	40	250	40	50	50	CN:2509	PC25476				

P Type Tool Holder

PDNNR/L

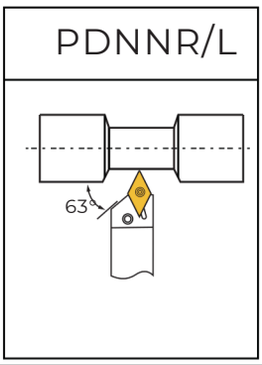

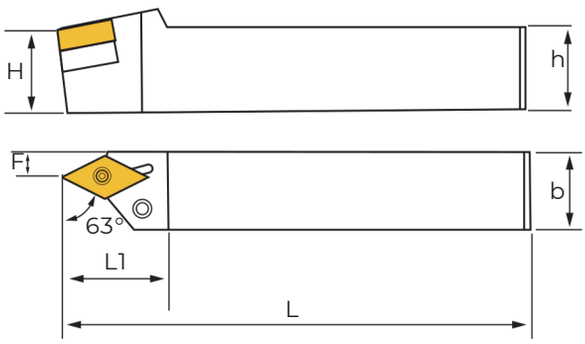



型号 Order Number		尺寸 Size (mm)						刀片 I nse rt	刀垫 Shi m	螺钉 S cre w	扳手 Wrench	杠杆 Lever	挡垫 Shim pin
左刀/ Le ft	右刀/Right	h	b	L	H	F	L1						
PDNNL2020K15	PDNNR2020K15	20	20	125	20	17	27	DN:1506	PD15318	VHX0825	S3	LV4B	SP4
PDNNL2525M15	PDNNR2525M15	25	25	150	25	22	27						
PDNNL3225P15	PDNNR3225P15	32	32	170	32	27	27						
PDNNL3232P15	PDNNR3232P15	25	25	150	25	22	33						
PDNNL1010K15-3	PDNNR1010K15-3	32	32	170	32	27	33	DN:1504	PD15318	VHX0821	S3	LV4B	SP4
PDNNL2525M15-3	PDNNR2525M15-3	32	32	170	32	27	38						
PDNNL3232P15-3	PDNNR3232P15-3	40	40	250	40	35	38						

PDJNR/L

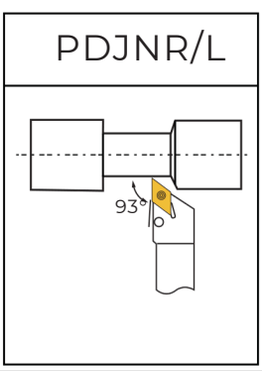

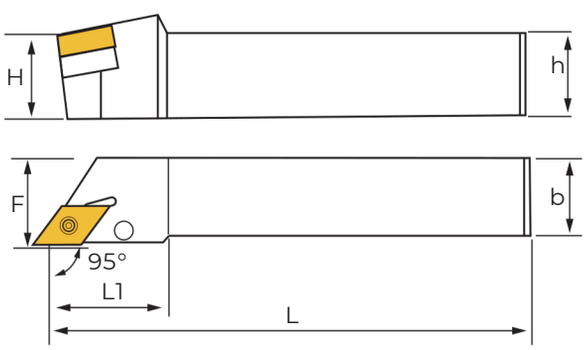



型号 Order Number		尺寸 Size (mm)						刀片 I nse rt	刀垫 Shi m	螺钉 S cre w	扳手 Wrench	杠杆 Lever	挡垫 Shim pin
左刀/ Le ft	右刀/Right	h	b	L	H	F	L1						
PDJNL1616H11	PDJNR1616H11	16	16	100	16	20	25	DN:1104	PD11270	VHX0613	S2.5	LV3	SP3
PDJNL2020K11	PDJNR2020K11	20	20	125	20	25	25						
PDJNL2525M11	PDJNR2525M11	25	25	150	25	32	30						
PDJNL2020K15	PDJNR2020K15	20	20	125	20	25	35	DN:1506	PD15318	VHX0825	S3	LV4B	SP4
PDJNL2525M15	PDJNR2525M15	25	25	150	25	32	35						
PDJNL3232P15	PDJNR3232P15	32	32	170	32	40	35						
PDJNL2020K15-3	PDJNR2020K15-3	20	20	125	20	25	35	DN:1504	PD15318	VHX0821	S3	LV4	SP4
PDJNL2525M15-3	PDJNR2525M15-3	25	25	150	25	32	35						
PDJNL3232-15-3	PDJNR3232-15-3	32	32	170	32	40	35						

P Type Tool Holder

PSBNR/L

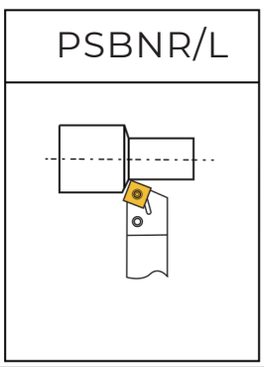

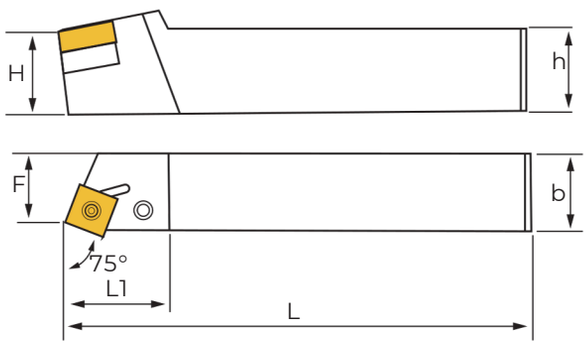



型号 Order Number		尺寸 Size (mm)						刀片 I nse rt	刀垫 Shi m	螺钉 S cre w	扳手 Wrench	杠杆 Lever	挡垫 Shim pin
左刀/ Le ft	右刀/Right	h	b	L	H	F	L1						
PSBNL1616H09	PSBNR1616H09	16	16	100	16	13	21	SN:0903	PS09318	VHX0613	S2.5	LV3	SP3
PSBNL2020K09	PSBNR2020K09	20	20	125	20	17	23						
PSBNL2020K12	PSBNR2020K12	20	20	125	20	17	28	SN:1204	PS12318	VHX0821	S3	LV4B	SP4
PSBNL2525M12	PSBNR2525M12	25	25	150	25	22	28						
PSBNL3225P12	PSBNR3225P12	32	25	150	25	22	28						
PSBNL3232P12	PSBNR3232P12	32	32	170	32	27	28						
PSBNL2525M15	PSBNR2525M15	25	25	150	25	22	35	SN:1506	PS15476	VHX0825	S3	LV5	SP5
PSBNL3232P15	PSBNR3232P15	32	32	170	32	27	35						
PSBNL3232P19	PSBNR3232P19	32	32	170	32	27	40	SN:1906	PS19476	VHX1027	S4	LV6	SP6
PSBNL4040S19	PSBNR4040S19	40	40	250	40	35	40						
PSBNL4040S2507	PSBNR4040S2507	40	40	250	40	35	48	SN:2507	PS25634	VHX1236	S5	LV8	SP8
PSBNL4040S2509	PSBNR4040S2509	40	40	250	40	35	48	SN:2509	PS25476				

PSDNN

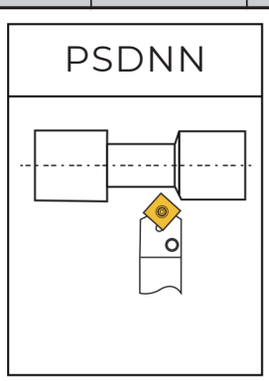

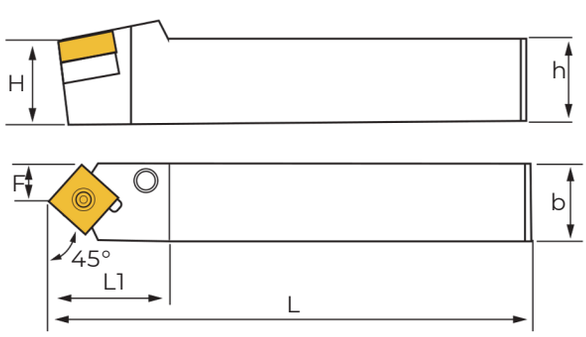

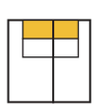

型号 Order Number	尺寸 Size (mm)						刀片 I nse rt	刀垫 Shi m	螺钉 S cre w	扳手 Wrench	杠杆 Lever	挡垫 Shim pin
	h	b	L	H	F	L1						
PSDNN2020K12	20	20	125	20	10	30	SN:1204	PS12318	VHX0821	S3	LV4	SP4
PSDNN2525M12	25	25	150	25	12.5	30						
PSDNN3232P12	32	32	170	32	16	40						
PSDNN2525M15	25	25	150	25	12.5	40	SN:1506	PS15476	VHX0825	S3	LV5	SP5
PSDNN3232P15	32	32	170	32	16	40						
PSDNN2525P19	32	32	170	32	16 2	40	SN:1906	PS19476	VHX1027	S4	LV6	SP6
PSDNN4040S19	40	40	150	40	20	40						
PSDNN4040S2507	40	40	250	40	20	50	SN:2507	PS25634	VHX1236	S5	LV8	SP8
PSDNN4040S2509	40	40	250	40		50	SN:2509	PS25476				

P Type Tool Holder

PSKNR/L

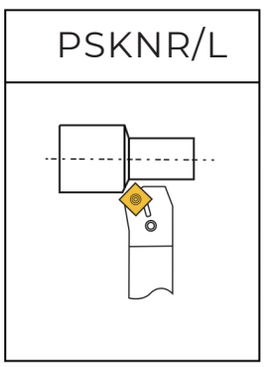

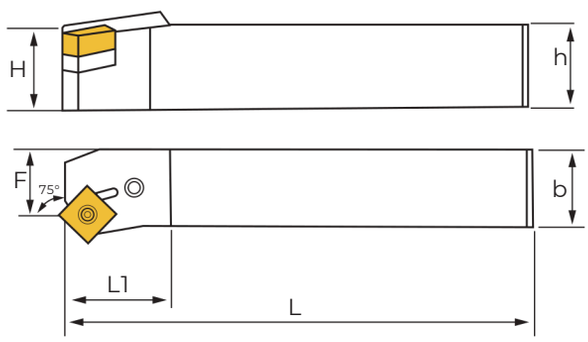



型号 Order Number		尺寸 Size (mm)						刀片 I nse rt	刀垫 Shi m	螺钉 S cre w	扳手 Wrench	杠杆 Lever	挡垫 Shim pin
左刀/ Le ft	右刀/Right	h	b	L	H	F	L1						
PSKNL1616H09	PSKNR1616H09	16	16	100	16	20	17	SN:0903	PS09318	VHX0613	S2.5	LV3	SP3
PSKNL2020K09	PSKNR2020K09	20	20	125	20	25	20						
PSKNL2020K12	PSKNR2020K12	20	20	125	20	25	26	SN:1204	PS12318	VHX0821	S3	LV4B	SP4
PSKNL2525M12	PSKNR2525M12	25	25	150	25	32	26						
PSKNL3232P12	PSKNR3232P12	32	32	170	32	38	26						
PSKNL2525M15	PSKNR2525M15	25	25	150	25	32	32	SN:1506	PS15476	VHX0825	S3	LV5	SP5
PSKNL3232P15	PSKNR3232P15	32	32	170	32	38	32						
PSKNL3232P19	PSKNR3232P19	32	32	170	32	38	36	SN:1906	PS19476	VHX1027	S4	LV6	SP6
PSKNL4040S19	PSKNR4040S19	40	40	250	40	50	40						
PSKNL4040S2507	PSKNR4040S2507	40	40	250	40	50	50	SN:2507	PS25634	VHX1236	S5	LV8	SP8
PSKNL4040S2509	PSKNR4040S2509	40	40	250	40	50	50	SN:2509	PS25476				

PSSNR/L

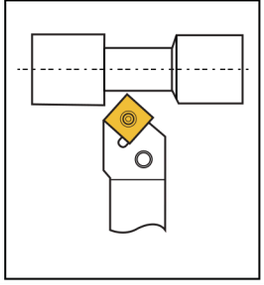

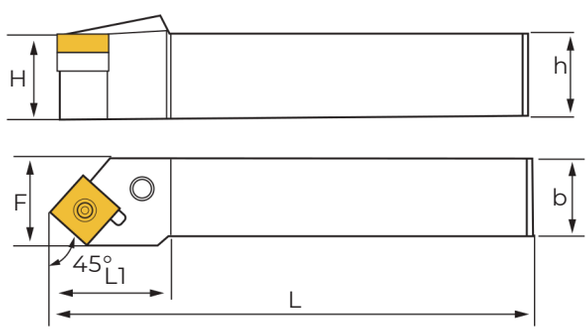

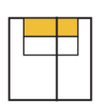

型号 Order Number		尺寸 Size (mm)						刀片 I nse rt	刀垫 Shi m	螺钉 S cre w	扳手 Wrench	杠杆 Lever	挡垫 Shim pin
左刀/ Le ft	右刀/Right	h	b	L	H	F	L1						
PSSNL1616H09	PSSNR1616H09	16	16	100	16	20	25	SN:0903	PS09318	VHX0613	S2.5	LV3	SP3
PSSNL2020K12	PSSNR2020K12	20	20	125	20	25	30	SN:1204	PS12318	VHX0821	S3	LV4	SP4
PSSNL2525M12	PSSNR2525M12	25	25	150	25	32	30						
PSSNL3232P12	PSSNR3232P12	32	32	170	32	40	40						
PSSNL2525M15	PSSNR2525M15	25	25	150	25	32	30	SN:1506	PS15476	VHX0825	S3	LV5	SP5
PSSNL3232P15	PSSNR3232P15	32	32	170	32	40	40						
PSSNL3232P19	PSSNR3232P19	32	32	170	32	40	40	SN:1906	PS19476	VHX1027	S4	LV6	SP6
PSSNL4040S19	PSSNR4040S19	40	40	250	40	50	50						
PSSNL4040S2507	PSSNR4040S2507	40	40	250	40	50	50	SN:2507	PS25634	VHX1236	S5	LV8	SP8
PSSNL4040S2509	PSSNR4040S2509	40	40	250	40	50	50	SN:2509	PS25476				

P Type Tool Holder

PTFNR/L

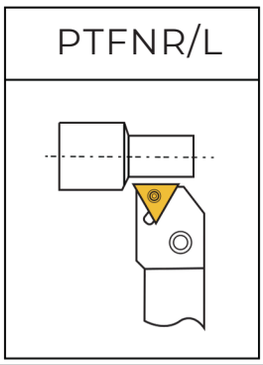

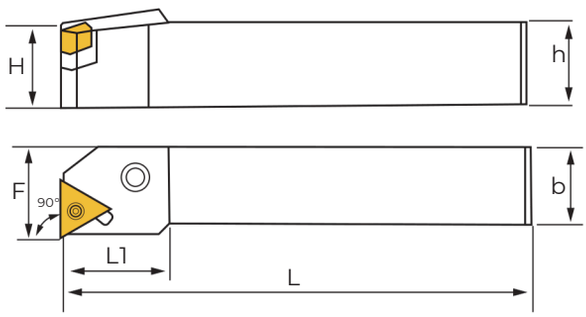

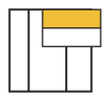

型号 Order Number		尺寸 Size (mm)						刀片 I nse rt	刀垫 Shi m	螺钉 S cre w	扳手 Wrench	杠杆 Lever	挡垫 Shim pin
左刀/ Le ft	右刀/Right	h	b	L	H	F	L1						
PTFNL1616H16	PTFNR1616H16	16	16	100	16	20	20	TN:1604	PT16476	VHX0617	S2.5	LV3	SP3
PTFNL2020K16	PTFNR2020K16	20	20	125	20	25	20						
PTFNL2525M22	PTFNR2525M22	25	25	150	25	32	20	TN:2204	PT22476	VHX0821	S3	LV4	SP4
PTFNL2525M22	PTFNR2525M22	25	25	150	25	32	25						
PTFNL3232P22	PTFNR3232P22	32	32	170	32	40	25						
PTFNL3232P27	PTFNR3232P27	32	32	170	32	40	34	TN:2706	PT27635	VHX0825	S3	LV5	SP5
PTFNL4040S27	PTFNR4040S27	40	40	250	40	50	34						

PT TNR/L

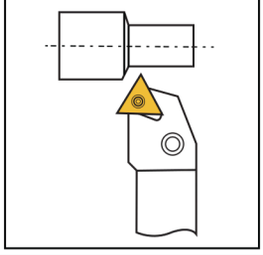

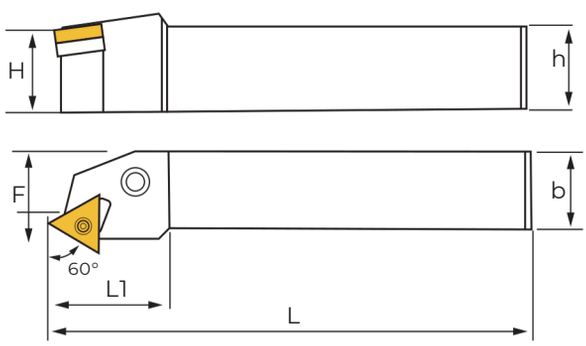

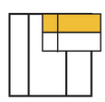

型号 Order Number		尺寸 Size (mm)						刀片 I nse rt	刀垫 Shi m	螺钉 S cre w	扳手 Wrench	杠杆 Lever	挡垫 Shim pin
左刀/ Le ft	右刀/Right	h	b	L	H	F	L1						
PTTNL1616H16	PTTNR1616H16	16	16	100	16	13	25	TN:1604	PT16476	VHX0617	S2.5	LV3	SP3
PTTNL2020K16	PTTNR2020K16	20	20	125	20	17	25						
PTTNL2525M22	PTTNR2525M22	25	25	150	25	22	32	TN:2204	PT22476	VHX0821	S3	LV4	SP4

P Type Tool Holder

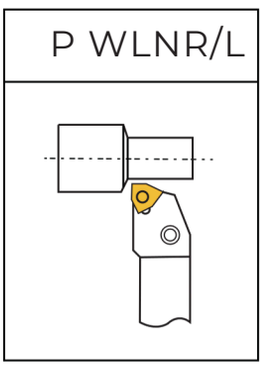

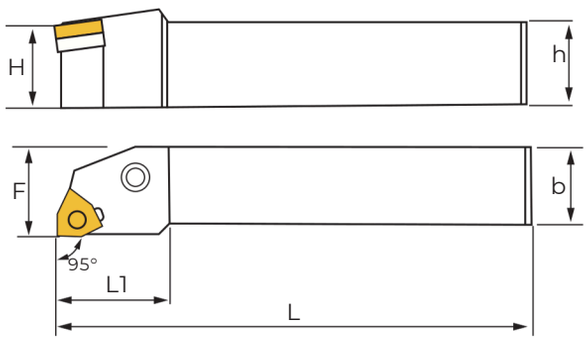

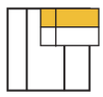

型号 Order Number		尺寸 Size (mm)						刀片 I nse rt	刀垫 Shi m	螺钉 S cre w	扳手 Wrench	杠杆 Lever	挡垫 Shim pin
左刀/ Le ft	右刀/Right	h	b	L	H	F	L1						
PWLNL1616H06	PWLNR1616H06	16	16	100	16	20	20	WN:0604	PW06270	VHX0617	S2.5	LV3	SP3
PWLNL2020K06	PWLNR2020K06	20	20	125	20	25	20						
PWLNL2525M06	PWLNR2525M06	25	25	150	25	32	20						
PWLNL2020K08	PWLNR2020K08	20	20	125	20	25	26	WN:0804	PW08318	VHX08318	S3	LV4	SP4
PWLNL2525M08	PWLNR2525M08	25	25	150	25	32	26						
PWLNL3232P08	PWLNR3232P08	32	32	170	32	40	35						

P Type Tool Holder

PCLCR/L

6°

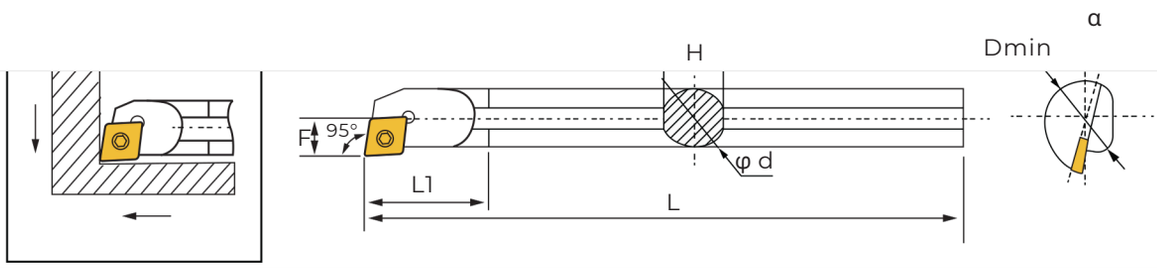

型号 Order Number		尺寸 Size (mm)							刀片 I nse rt	刀垫 Shi m	螺钉 S cre w	扳手 Wrench	杠杆 Lever	挡垫 Shim pin
左刀/ Le ft	右刀/Right	φ Dmin	φ d	H	L	F	α	L1						
S 16Q- PCLNL09	S 16Q- PCLNR 09	20	16	1	180	11	12	28	CN:0903	-	VHX0509	S2	LV3C	-
S 20Q- PCLNL09	S 20Q- PCLNR 09	25	20	18	180	13	11	31						
S 25R - PCLNL09	S 25R - PCLNR 09	32	25	23	200	17	10	35						
S 20Q- PCLNL12	S 20Q- PCLNR 12	25	20	18	180	13	11	31	CN:1204	-	VHX0613	S2.5	LV4A	-
S 25R - PCLNL12	S 25R - PCLNR 12	32	25	23	200	17	12	40						
S 32S - PCLNL12	S 32S - PCLNR 12	44	32	30	250	22	10	50		PC12318	VHX0821	S3	LV4	SP4
S 40T - PCLNL12	S 40T - PCLNR 12	54	40	37	300	27	10	55						
S 50U- PCLNL12	S 50U- PCLNR 12	63	50	47	350	35	10	56						
S 50U- PCLNL19	S 50U- PCLNR 19	63	50	47	350	35	10	63	CN:1906	PC19476	VHX1207	S4	LV6	SP6

PDSNR/L

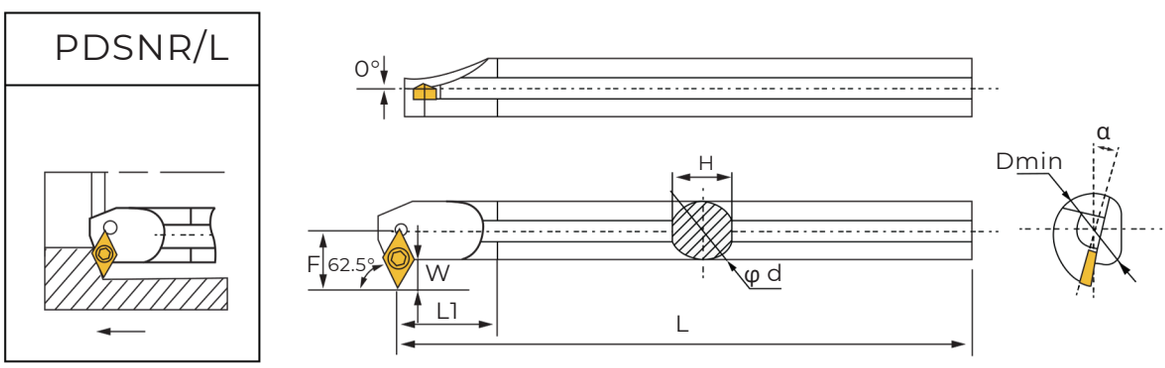

型号 Order Number		尺寸 Size (mm)								刀片 I nse rt	刀垫 Shi m	螺钉 S cre w	扳手 Wrench	杠杆 Lever	挡垫 Shim pin
左刀/ Le ft	右刀/Right	φ Dmin	φ d	H	L	F	α	L1	W						
S 32S - PDS NL15	S 32S - PDS NR 15	40	32	30	250	22	11	45	8.5	DN:1506	PD15318	VHX0821	S3	LV4B	SP4
S 40T - PDS NL15	S 40T - PDS NR 15	50	40	37	300	27	11	43	9.4						
S 32S - PDS NL15-3	S 32S - PDS NR 15-	340	32	30	250	22	11	45	8.5	DN:1504	PD15318	VHX0821	S3	LV4	SP4
S 40T - PDS NL15-3	S 40T - PDS NR 15-	350	40	27	300	27	11	43	9.4						

P Type Tool Holder

PDUNR/L

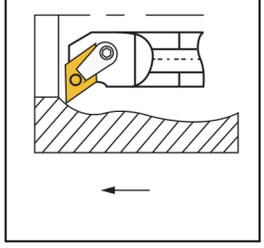

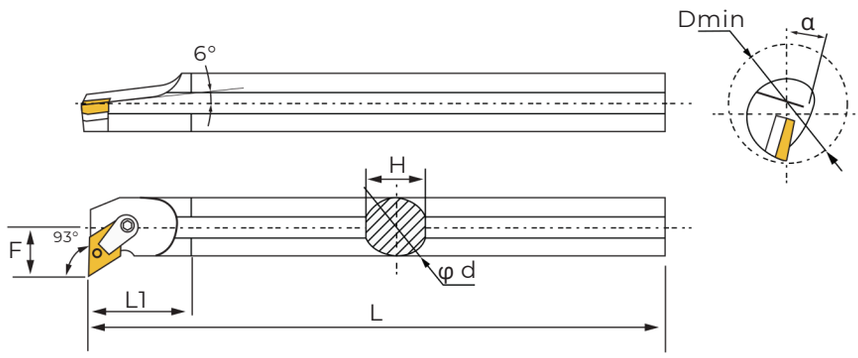

型号 Order Number		尺寸 Size (mm)							刀片 I nse rt	刀垫 Shi m	螺钉 S cre w	扳手 Wrench	杠杆 Lever	挡垫 Shim pin
左刀/ Le ft	右刀/Right	φ Dmin	φ d	H	L	F	α	L1						
S 20Q- PDUNL11	S 20Q- PDUNR 11	25	20	8	180	13	16	30	DN:1104	-	VHX0512	S2	LV3D	-
S 25R - PDUNL11	S 25R - PDUNR 11	32	25	23	200	17	13	35						
S 32S - PDUNL11	S 32S - PDUNR 11	40	32	30	250	22	16	40		PD11270	VHX0617	S2.5	LV3	SP3
S 32S - PDUNL15	S 32S - PDUNR 15	40	32	30	250	22	16	50	DN:1506	PD15318	VHX0821	S3	LV4B	SP4
S 40T - PDUNL15	S 40T - PDUNR 15	50	40	37	300	27	11	50						
S 32S - PDUNL15-3	S 32S - PDUNR 15-3	40	32	30	250	22	16	50	DN:1504	PD15318	VHX0821	S4	LV4	SP4
S 40T - PDUNL15-3	S 40T - PDUNR 15-3	50	40	37	300	27	11	50						

PSKNR/L

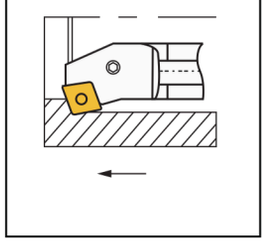

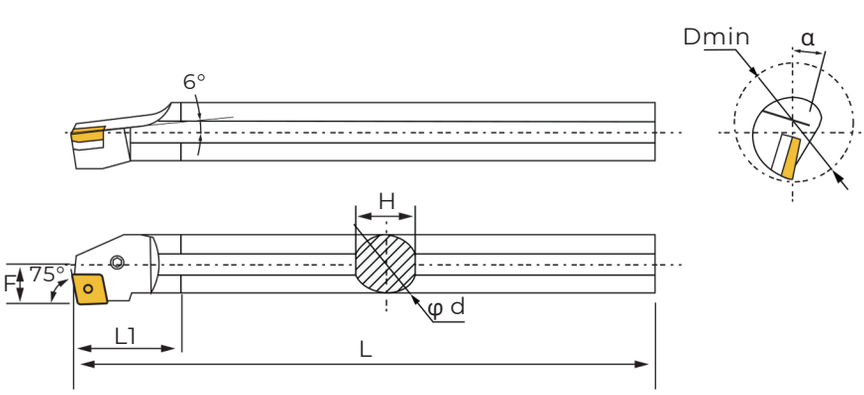

型号 Order Number		尺寸 Size (mm)							刀片 I nse rt	刀垫 Shi m	螺钉 S cre w	扳手 Wrench	杠杆 Lever	挡垫 Shim pin
左刀/ Le ft	右刀/Right	φ Dmin	φ d	H	L	F	α	L1						
S 25R - PS KNL12	S 25R - PS KNR 12	32	25	23	200	17	12	42	SN:1204	-	VHX0613	S2.5	LV4A	-
S 32S - PS KNL12	S 32S - PS KNR 12	44	32	30	250	22	10	45		PS12318	VHX0821	S3	LV4	SP4
S 40T - PS KNL12	S 40T - PS KNR 12	54	40	37	300	27	10	50						

P Type Tool Holder

PTFNR/L

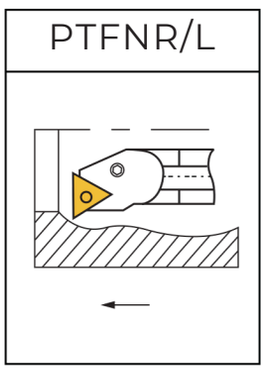

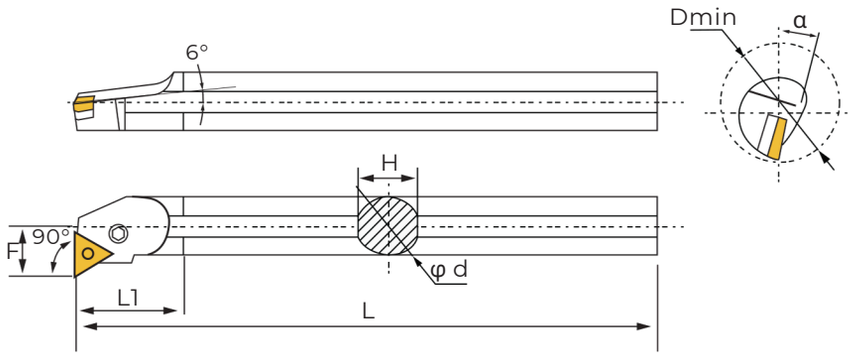

型号 Order Number		尺寸 Size (mm)							刀片 I nse rt	刀垫 Shi m	螺钉 S cre w	扳手 Wrench	杠杆 Lever	挡垫 Shim pin
左刀/ Le ft	右刀/Right	φ Dmin	φ d	H	L	F	α	L1						
S 16Q- PT FNL11	S 16Q- PT FNR 11	20	16	15	180	11	14	28	TN:1103	-	VHX0509	S2	LV2	-
S 20Q- PT FNL11	S 20Q- PT FNR 11	25	20	18	180	13	12	31						
S 25R - PT FNL11	S 25R - PT FNR 11	32	25	23	200	17	10	35						
S 25R - PT FNL16	S 25R - PT FNR 16	32	25	23	200	17	12	42	TN:1604	-	VHX0512	S2.5	LV3B	-
S 32S - PT FNL16	S 32S - PT FNR 16	44	32	30	250	22	10	50		PT16476	VHX0613	S2.5	LV3B	sp3
S 40T - PT FNL16	S 40T - PT FNR 16	54	40	37	300	27	10	55						

P WLNR/L

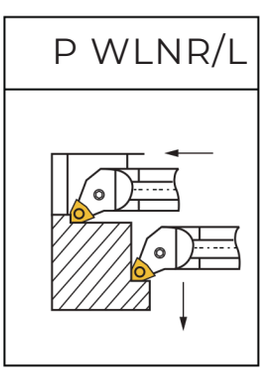

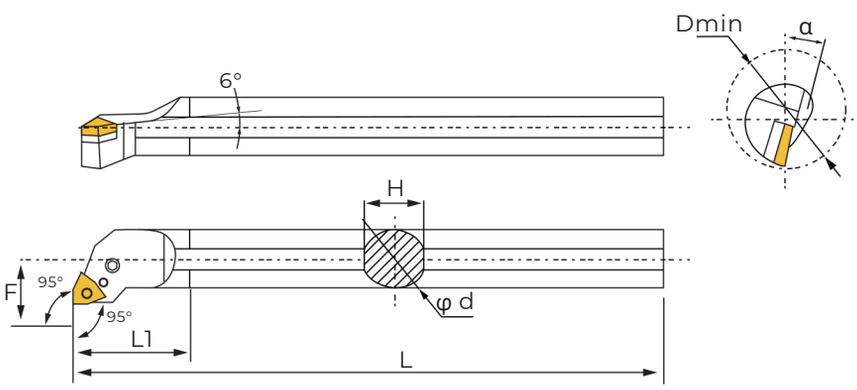

型号 Order Number		尺寸 Size (mm)							刀片 I nse rt	刀垫 Shim	螺钉 S cre w	扳手 Wrench	杠杆 Lever	挡垫 Shim pin
左刀/ Le ft	右刀/Right	φ Dmin	φ d	H	L	F	α	L1						
S 16Q- PW LNL06 S	S 16Q- PW LNR 06	20	16	15	180	11	13	25	WN:0604	-	VHX0512	S2.5	LV3B	-
20Q- PW LNL06	S 20Q- PW LNR 06	25	20	18	180	13	13	32						
S25R-PWLNL06 S	S25R-PWLNR06 S	32	25	23	200	17	13	25						
20Q- PW LNL08	20Q- PW LNR 08	25	20	18	180	13	13	32	WN:0804	-	VHX0613	S2.5	LV4A	-
S25R-PWLNL08	S25R-PWLNR08	32	25	23	200	17	13	40						
S32S-PWLNL08	S32S-PWLNR08	40	32	30	250	22	13	50		PW08318	VHX0821	S3	LV4A	SP4
S40T-PWLNL08	S40T-PWLNR08	50	40	42	300	30	13	55						



High Precision Tooling

+1 (786)753-7547

Shoptoolusa

sales@shoptoolusa.com

Shopping Tool & Machinery corp

1691 W 37Th ST STE 26
Hialeah FL 33012
United States

www.shoptoolusa.com